## Application for ISPC

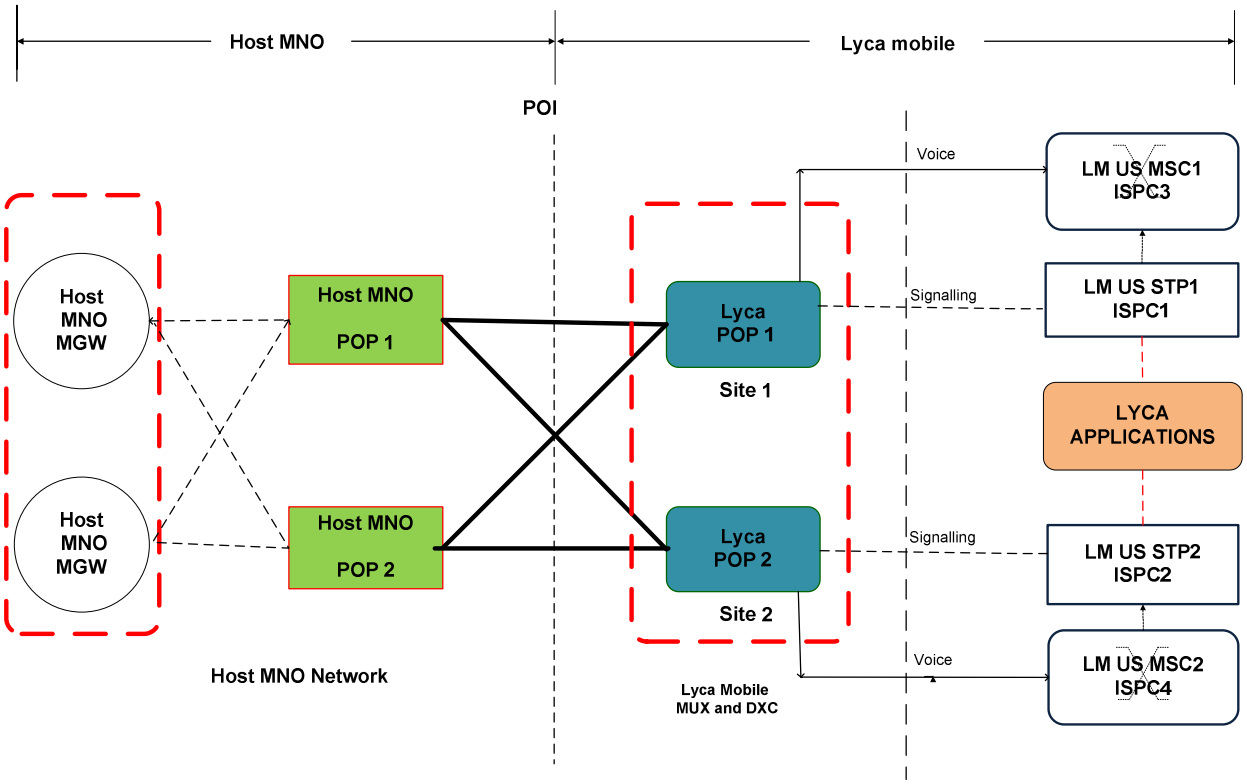


*Figure 1, US Lycamobile Network Diagram*

ISPCs will be used on an international gateway exchange that fors part of the US C7 network, and that

- Interconnects to T-Mobile, US (the Host Mobile Network Operator) for Signalling and Voice Traffic, and
- Interconnects to other international gateway exchanges within the International Signalling Point Code network to carry international and roaming Signalling and Voice Traffic.