BLOCK DIAGRAM
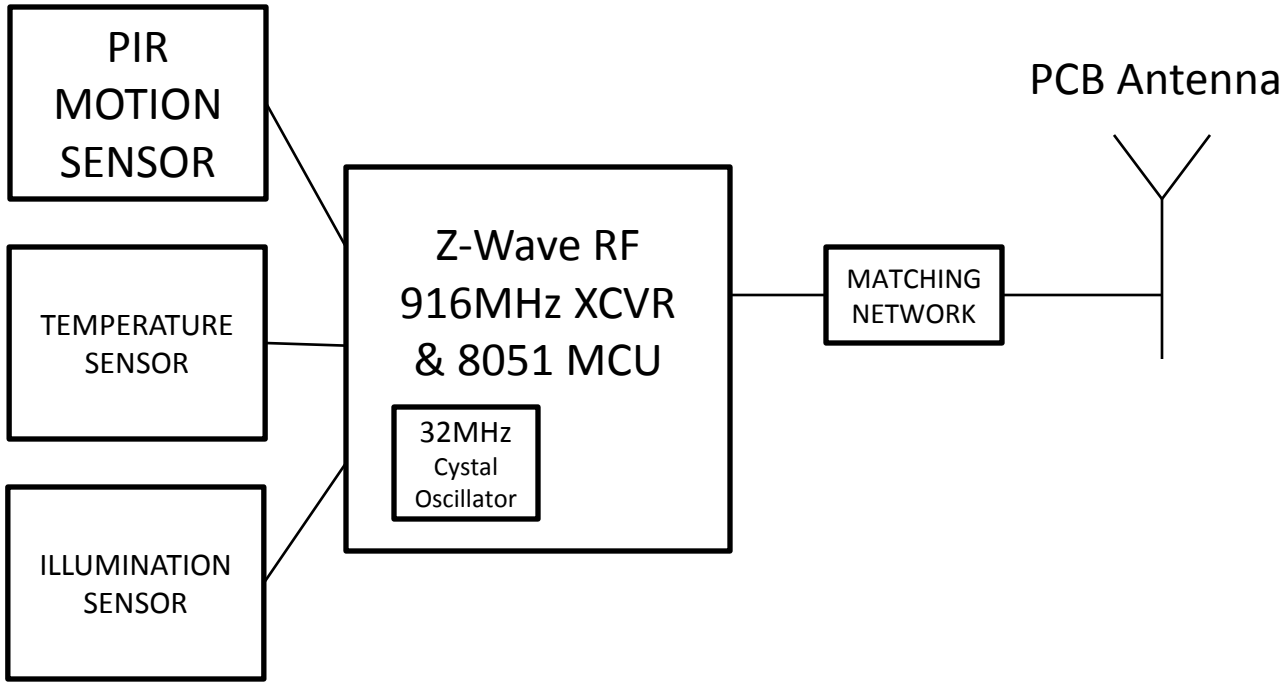
EZMultiPli Wireless Z-Wave Multi-Sensor
Motion – Temperature – Illumination