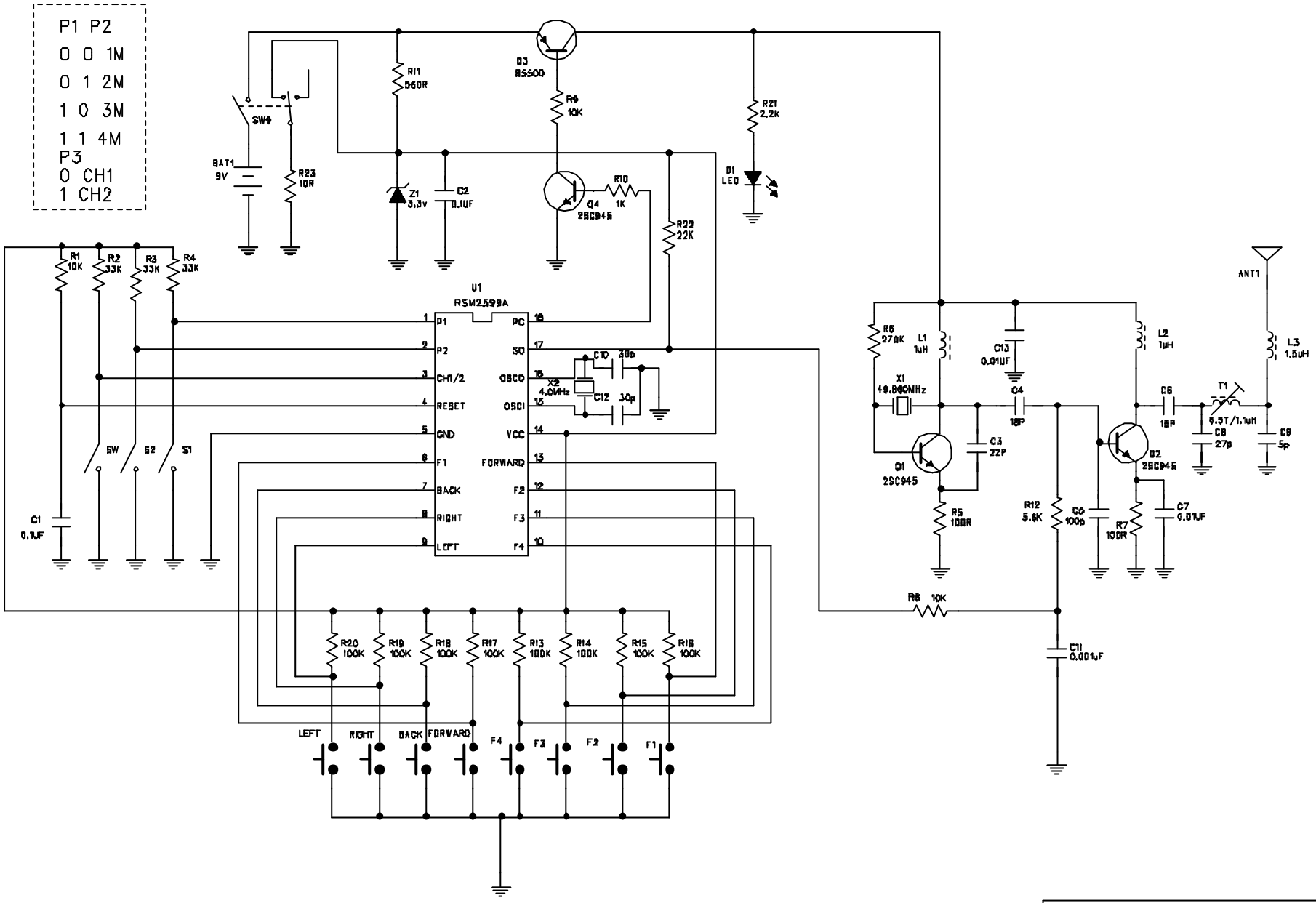

RIGHT TOP INDUSTRIAL LTD		
SCHMATIC CIRCUIT	DOCUMENT ON:	
ITEM NAME: TANK TX UNIT		
ITEM ON:	DWG. NO:	REV:
DRAWN:	DATE:	SHEET:
APP . BY:	DATE:	