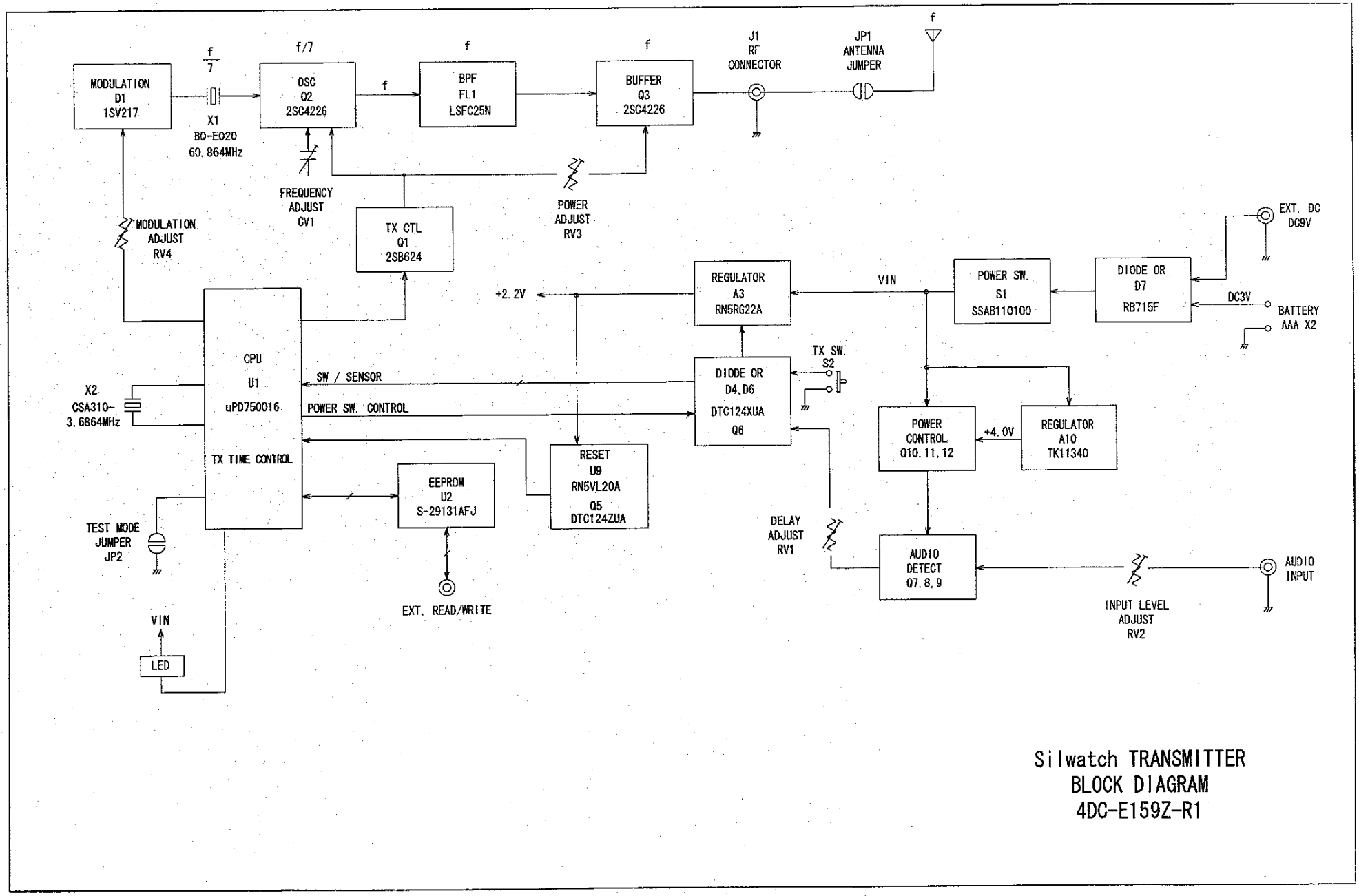

Silwatch TRANSMITTER
BLOCK DIAGRAM
4DC-E159Z-R1