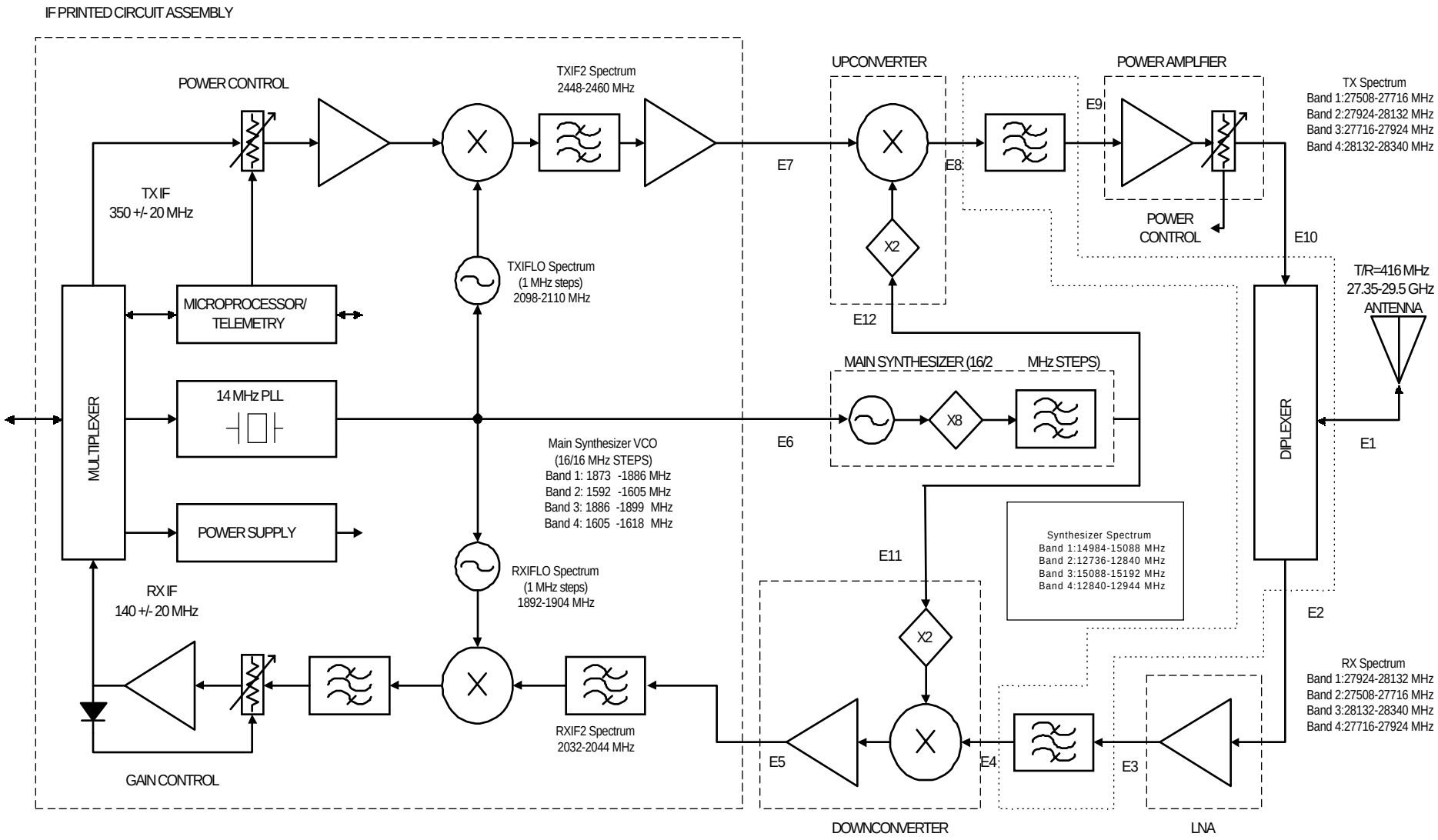28 GHz Radio Block Diagram
Bands 1, 2, 3 & 4 (LMDS)