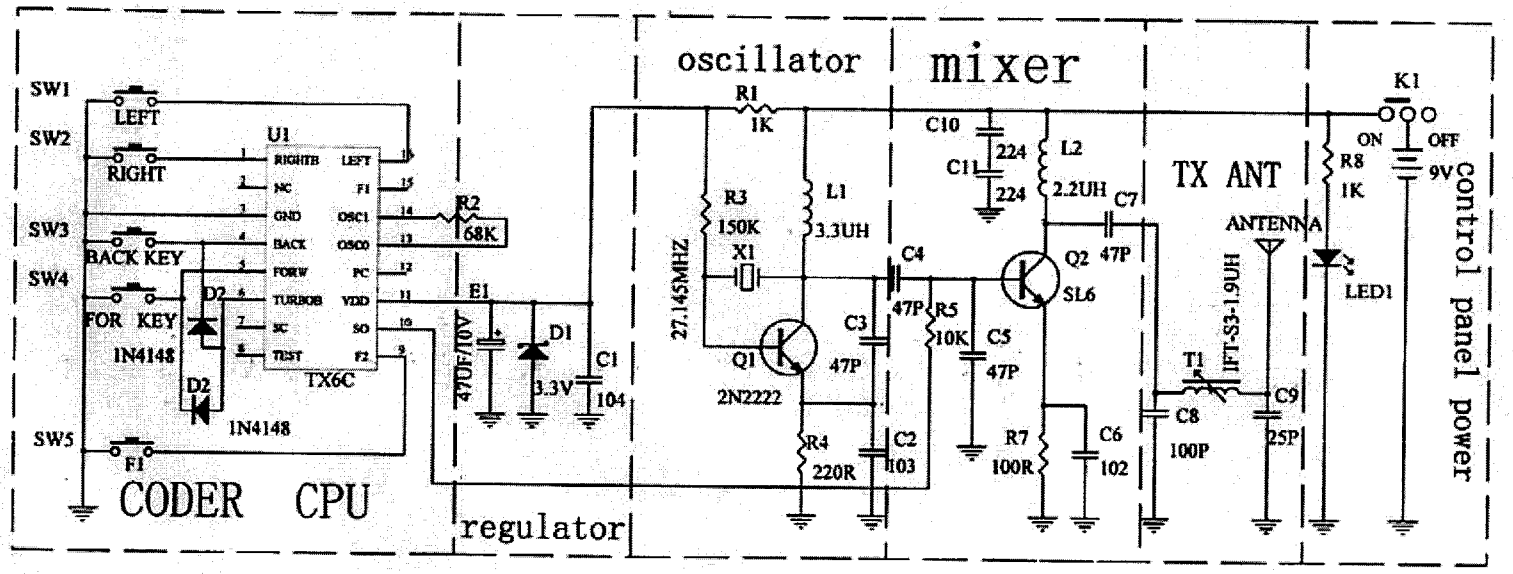

FILE NAME:	TX remote armored car Schematic diagram (27.145MHZ)	VERSION:	1	FILE NO	PEWI0037	APPROVED:	
PRODUCT NO:	54577	PAGE:	1OF1	PREPARED BY:		DATE:	
COMPANY	Wing Shing Metal & Plastics Products Ltd						