Application of Tagging System for FCC Approval

Identification of images

Page 2 TAG PCB Electrical Schematic

Page 3 PAT and SAT Identification Labels

Page 4 RAT Identification Label

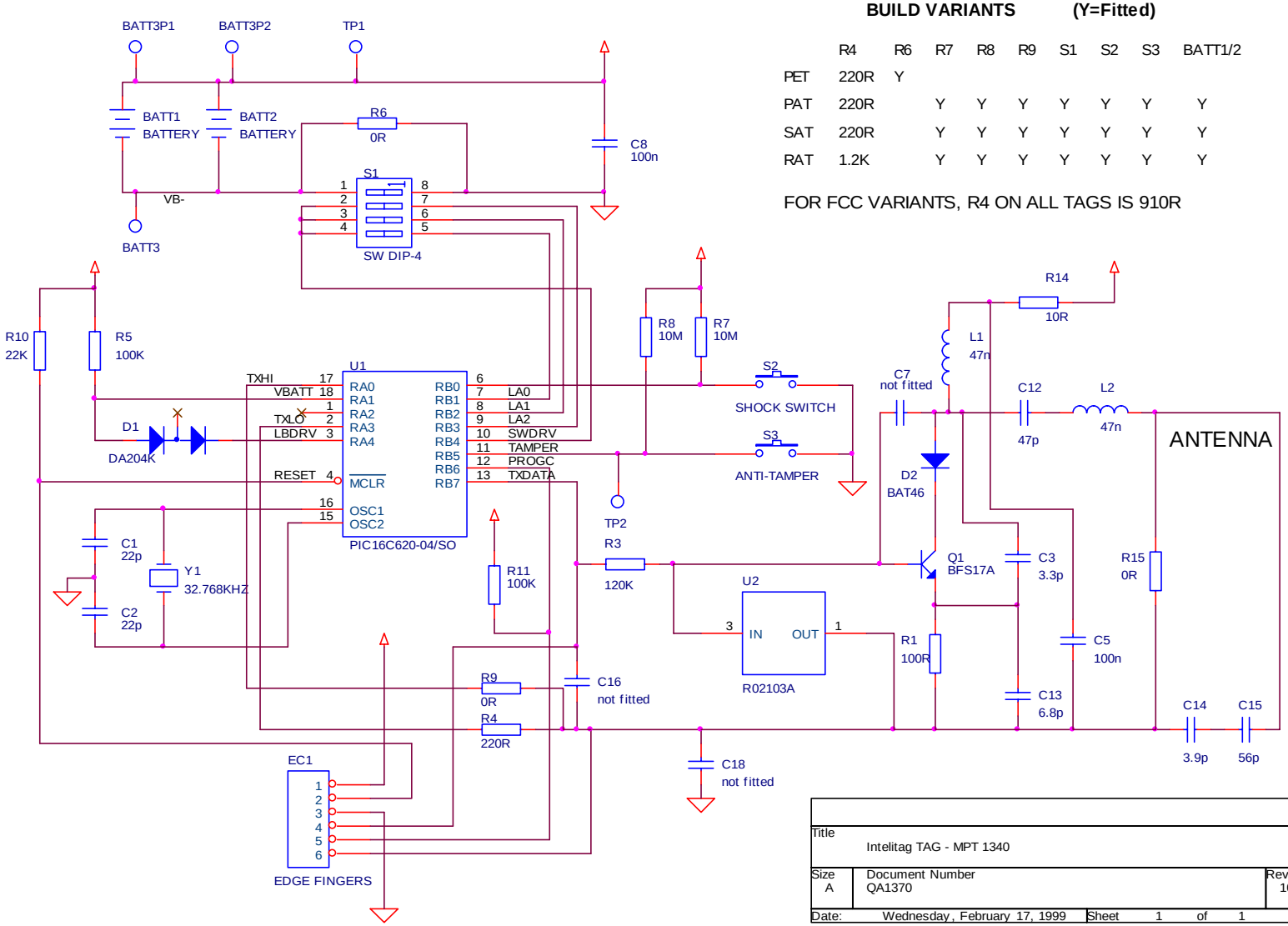

BUILD VARIANTS (Y=Fitted)

	R4	R6	R7	R8	R9	S1	S2	S3	BATT1/2
PET	220R	Y							
PAT	220R		Y	Y	Y	Y	Y	Y	Y
SAT	220R		Y	Y	Y	Y	Y	Y	Y
RAT	1.2K		Y	Y	Y	Y	Y	Y	Y

FOR FCC VARIANTS, R4 ON ALL TAGS IS 910R

Title	Intelitag TAG - MPT 1340	
Size A	Document Number QA1370	Rev 10b
Date: Wednesday, February 17, 1999	Sheet 1 of 1	

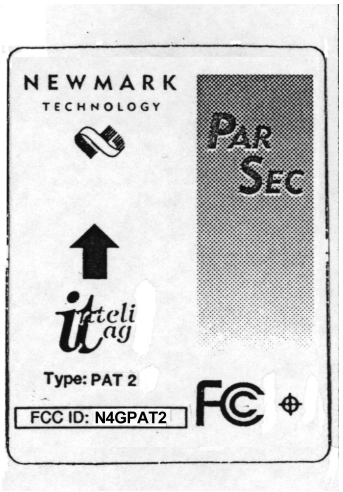
NEWMARK
TECHNOLOGY
PAR
SEC
Type: PAT 2
FCC ID: N4GPAT2

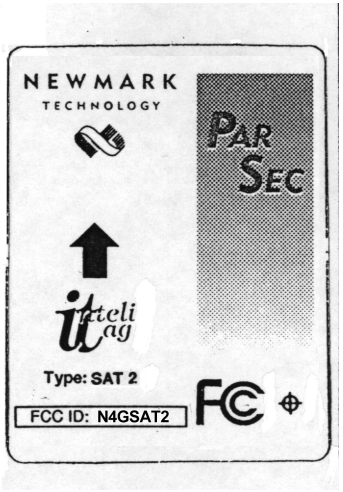
NEWMARK
TECHNOLOGY
PAR
SEC
Type: SAT 2
FCC ID: N4GSAT2

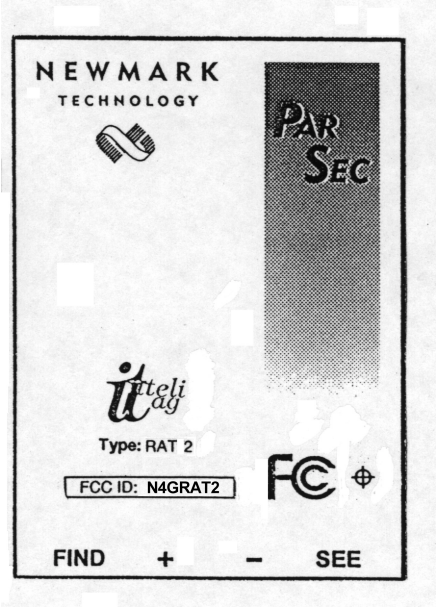
NEWMARK
TECHNOLOGY
PAR
SEC
itteli
tag
Type: RAT 2
FCC ID: N4GRAT2
FCC
FIND
+
–
SEE