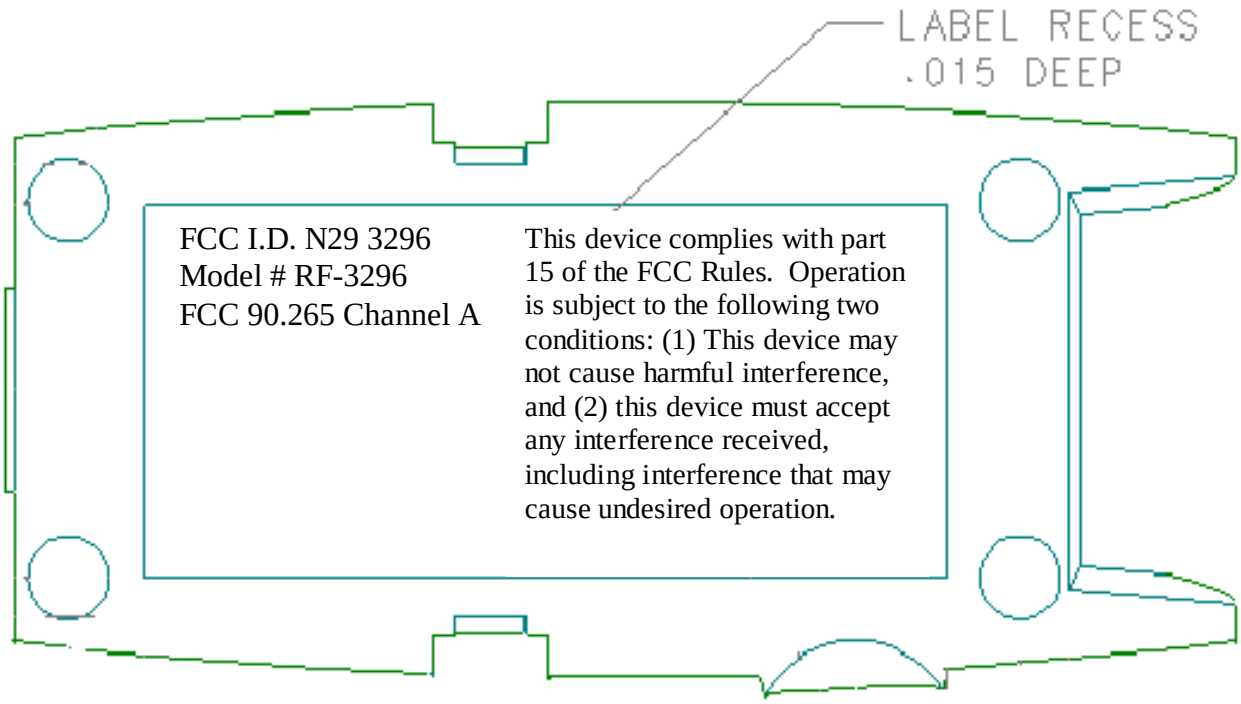

Corrected device label for Base Station.