SCHEMATIC DIAGRAM

FOR 49M TX

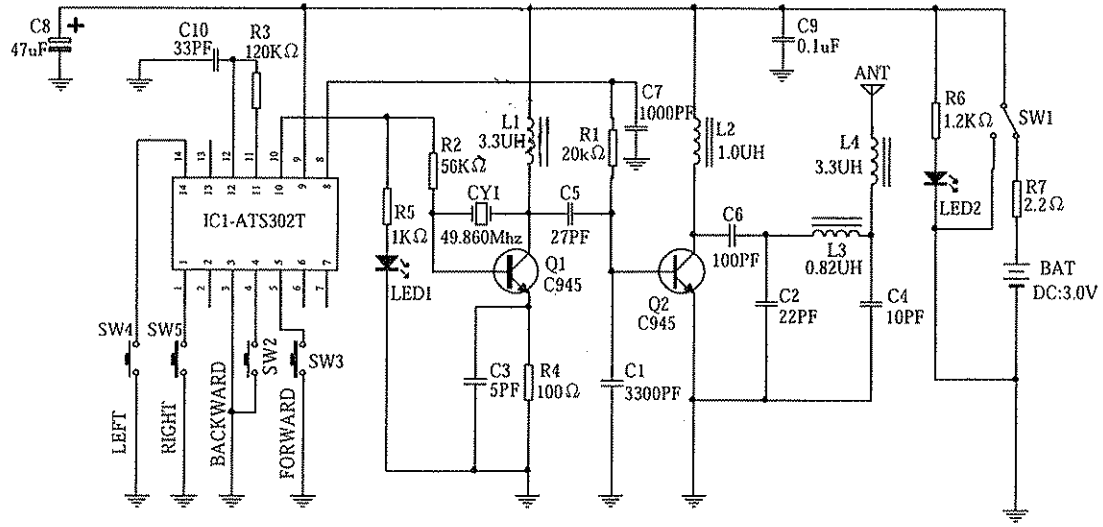

49.860MHz - TX

Item no: 325994
Item name: Itsy Bitsy Bratz RC Vehicle(49Mhz)
Date: 4/12/06