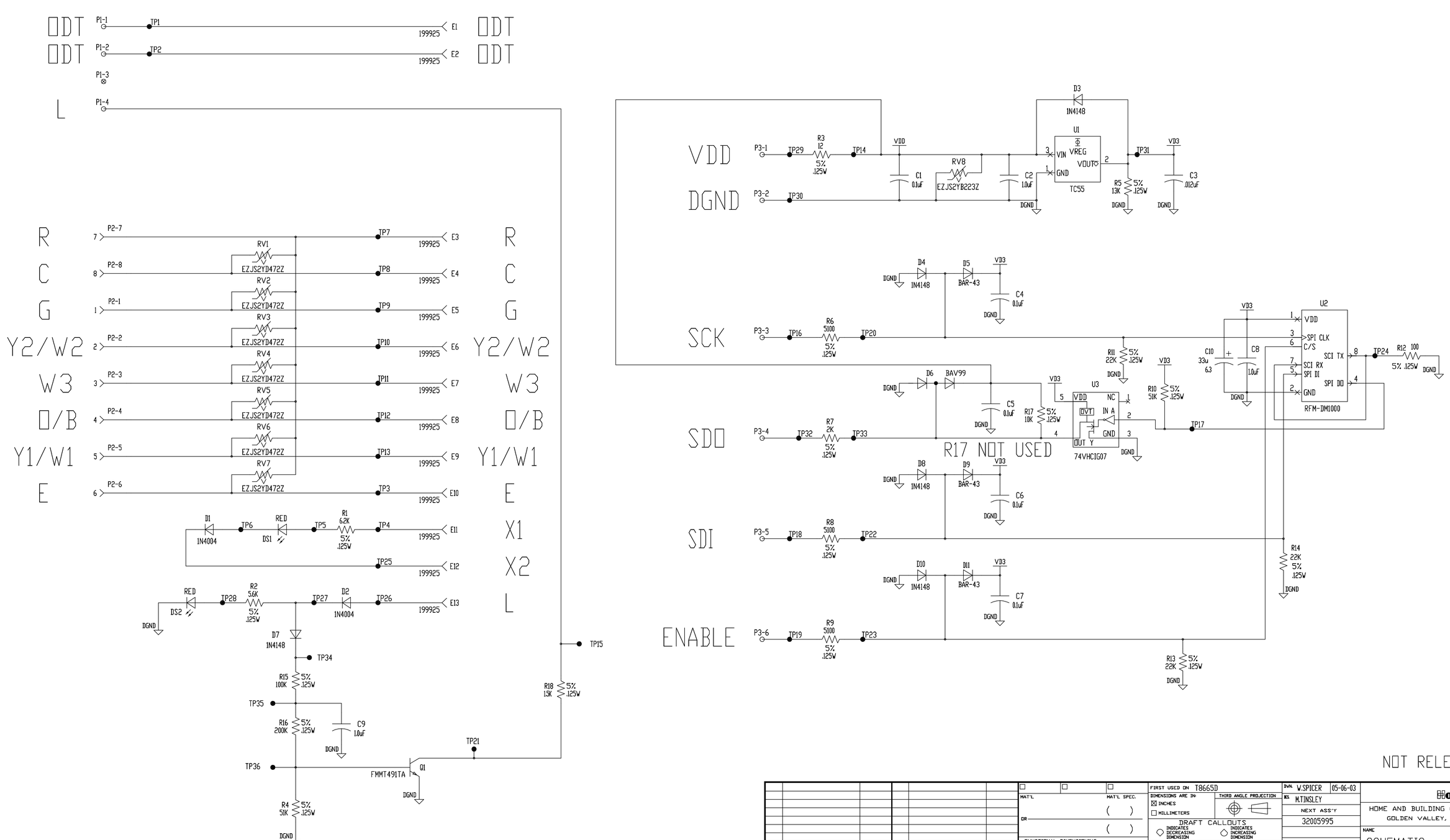

NOT RELEASED

X	XX-XX-02	02-XXXX			
REV	DATE	EO	REV	DATE	EO

DIMENSIONS & TOLERANCES PER ANSI Y14.5M-1994 & HBC ENGINEERING STANDARDS

MAT'L
MAT'L SPEC.
( )
OR
( )

FUNCTIONAL DIMENSIONING:
ALL DIMENSIONED AND UNDIMENSIONED GEOMETRY AND TOLERANCING ON THIS DRAWING IS DEFINED AND CONTROLLED BY THE DATABASE FILE. KEY INFORMATION IS REPRESENTED BY THIS DRAWING CONTAINING FUNCTIONAL DIMENSIONS.
CONTROLLED BY DATABASE FILE:

FIRST USED ON T8665D
DIMENSIONS ARE IN: ☒ INCHES ☐ MILLIMETERS
THIRD ANGLE PROJECTION
DRAFT CALLOUTS
INDICATES DECREASING DIMENSION
INDICATES INCREASING DIMENSION
-TOLERANCE UNLESS NOTED-
MACHINED ∠S ±5° FORMED ∠S +2° -1°

MILLIMETERS		INCHES	
OVER	INCLUDING		
0 TO 6	±.81		
6 TO 30	±.62	.0	±.02
30 TO 100	±.03	.00	±.01
100 TO 300	±.05	.000	±.010
300 TO 1000	±.08		

DWN. W.SPICER 05-06-03
DES. M.TINSLEY
NEXT ASS'Y 32005995
REFERENCE 32001037
DEV. NO. GI32540
SIZE D

Honeywell
HOME AND BUILDING CONTROL
GOLDEN VALLEY, MN

NAME SCHEMATIC
DRAWING NO. 32005997 REV 7
SCALE NONE Sheet 1 of 1

INTEGRA 3.51
ARCHIVE REF NO. 32005995