Bom: 105052-01, REV A

Fab PCB: 105067-01, REV A2

ECO	Rev	Date	Initials	Remarks
			M. V	PRODUCTION RELEASE

Project: D271
Document Number: 105069-01

Description: 2.4Ghz CORDLESS, BASE KEYBOARD

Drawn by: Michael Vu

Last Update: July/19/2001

Approvals	Approved by	Date
Analog circuits	Michael Vu	
Digital circuits	Michael Vu	
Final Release	SA Foo	

CONFIDENTIAL
and Proprietary Information of
CIDCO Communications, LLC
Unauthorized distribution is prohibited.

Title	D271 BASE KEYPAD	
Size Custom	Document Number 105069-01	Rev A
Date: Friday, July 20, 2001	Sheet 1 of 3	

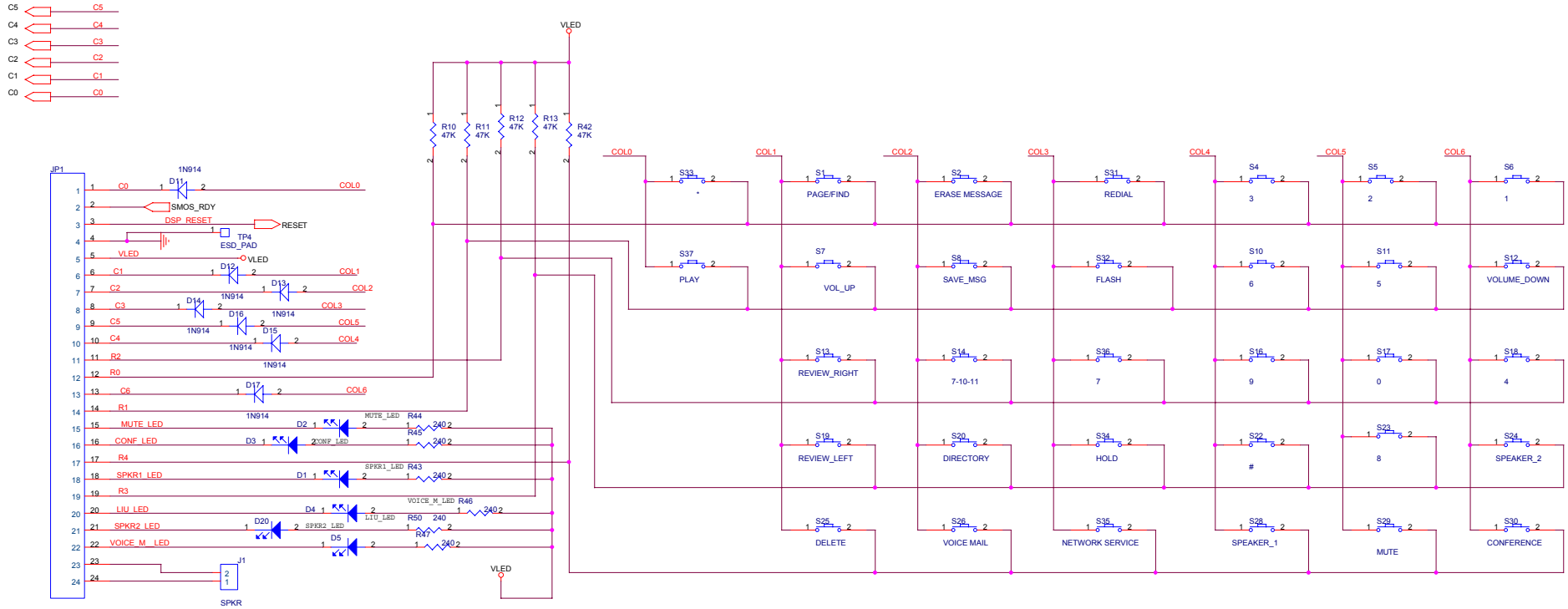

NOTE: FOR D271, R43,R44,R46,R47 SHOULD BE 0OHM

D3 AND D20 , R50, R45 ARE NOT USED.

KEYBOARD

Notes:

CONFIDENTIAL

and Proprietary Information of

CIDCO Communications, LLC

Unauthorized distribution is prohibited.

DRAWN BY: MICHAEL VU

Title	C2441 Base Keypad	
Size C	Document Number 105069-01	Rev A
Date: Friday, July 20, 2001	Sheet 2 of 3	

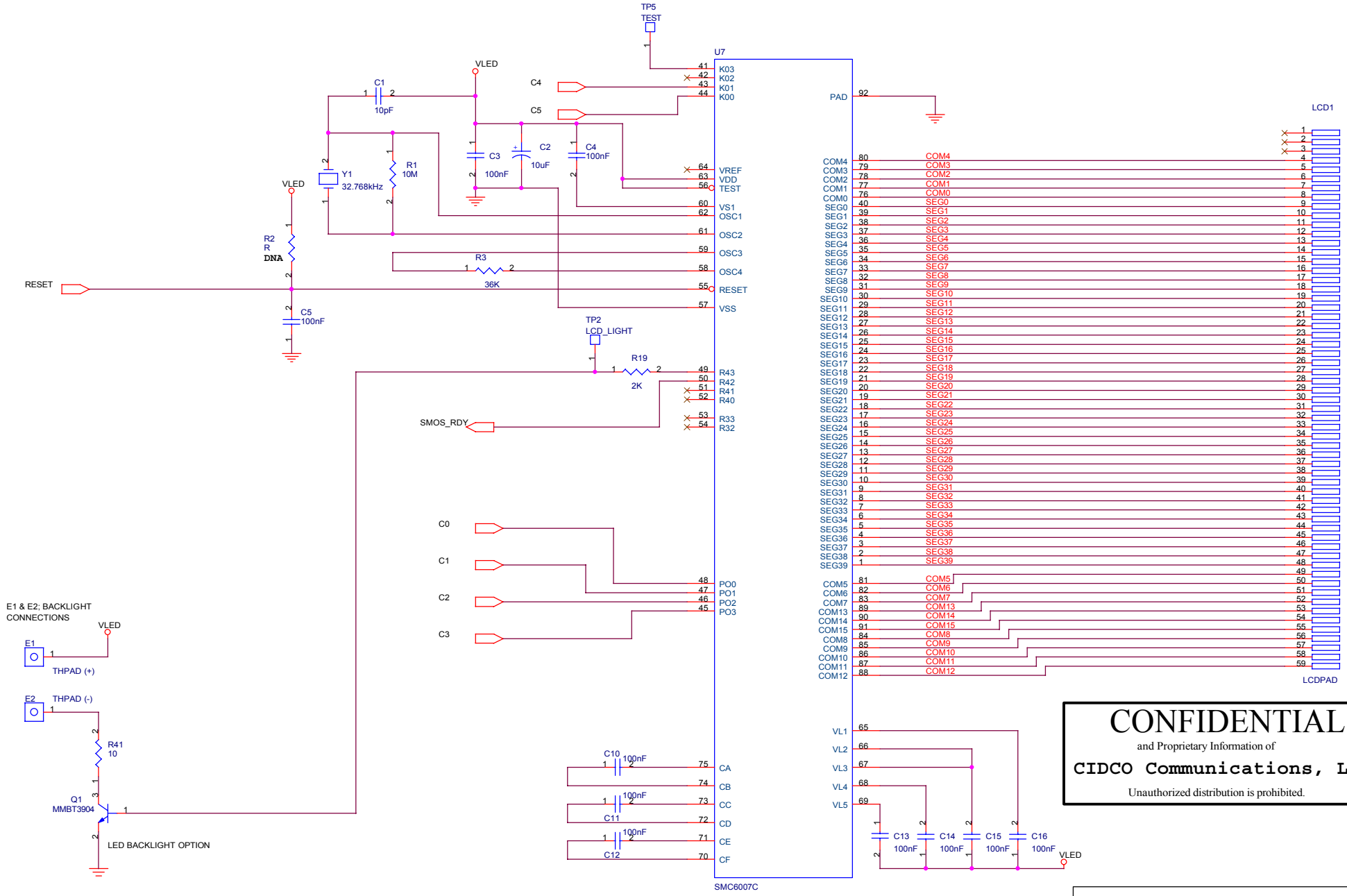

LCD INTERFACE

CONFIDENTIAL
and Proprietary Information of
CIDCO Communications, LLC
Unauthorized distribution is prohibited.

DRAWN BY: MICHAEL VU

Title	C2441 Base Keypad
Size Custom	Document Number 105069-01
Rev	A
Date:	Friday, July 20, 2001
Sheet	3 of 3

BOM: 105395-01, REV A

PCB: 105396-01, REV A

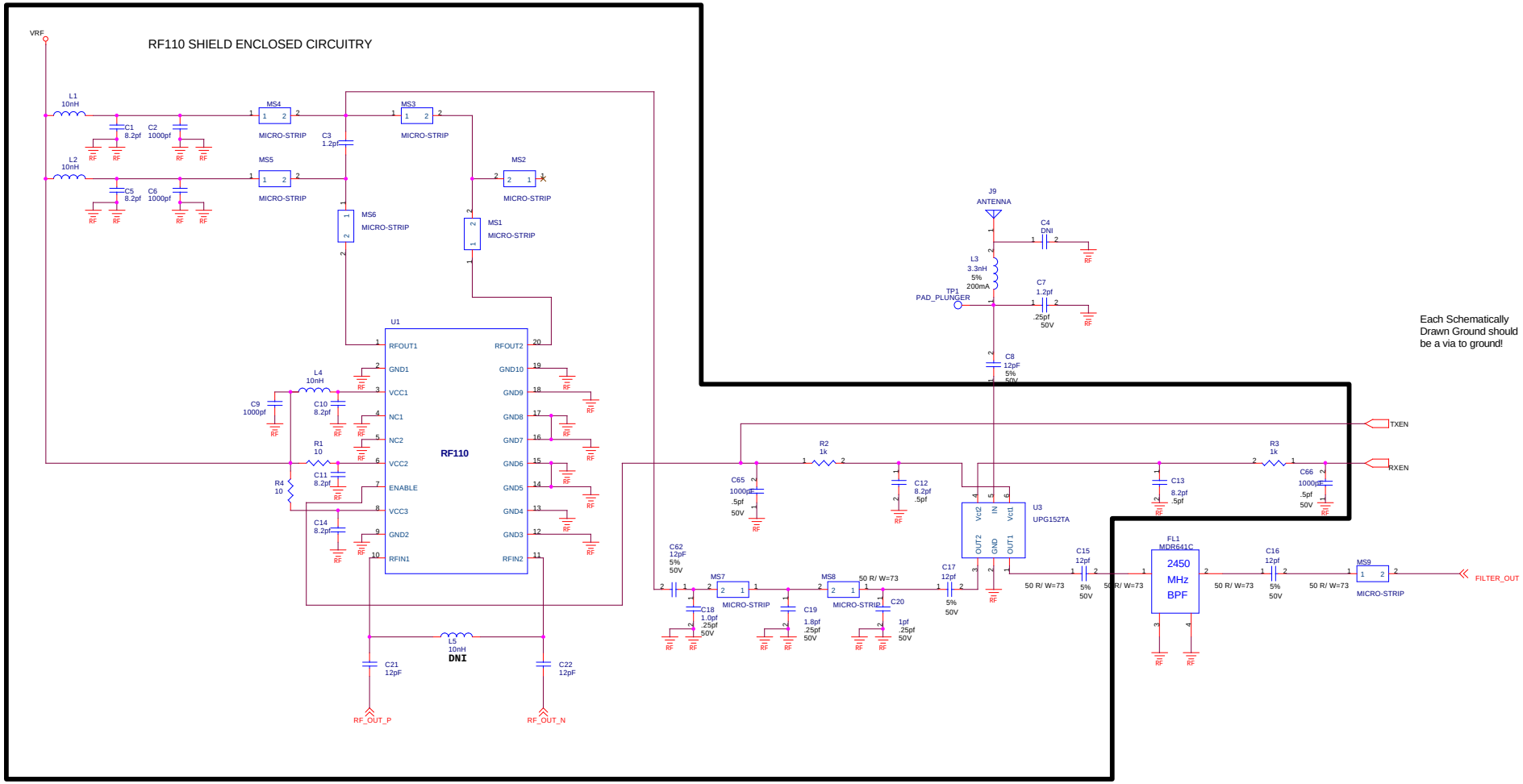

Power Amplifier

	CIDCO, INC.
Title	D271 BASE MAIN; RF PA
Size C	Document Number 105397-01 — Rev A
Date: Monday, July 23, 2001	Sheet 1 of 11

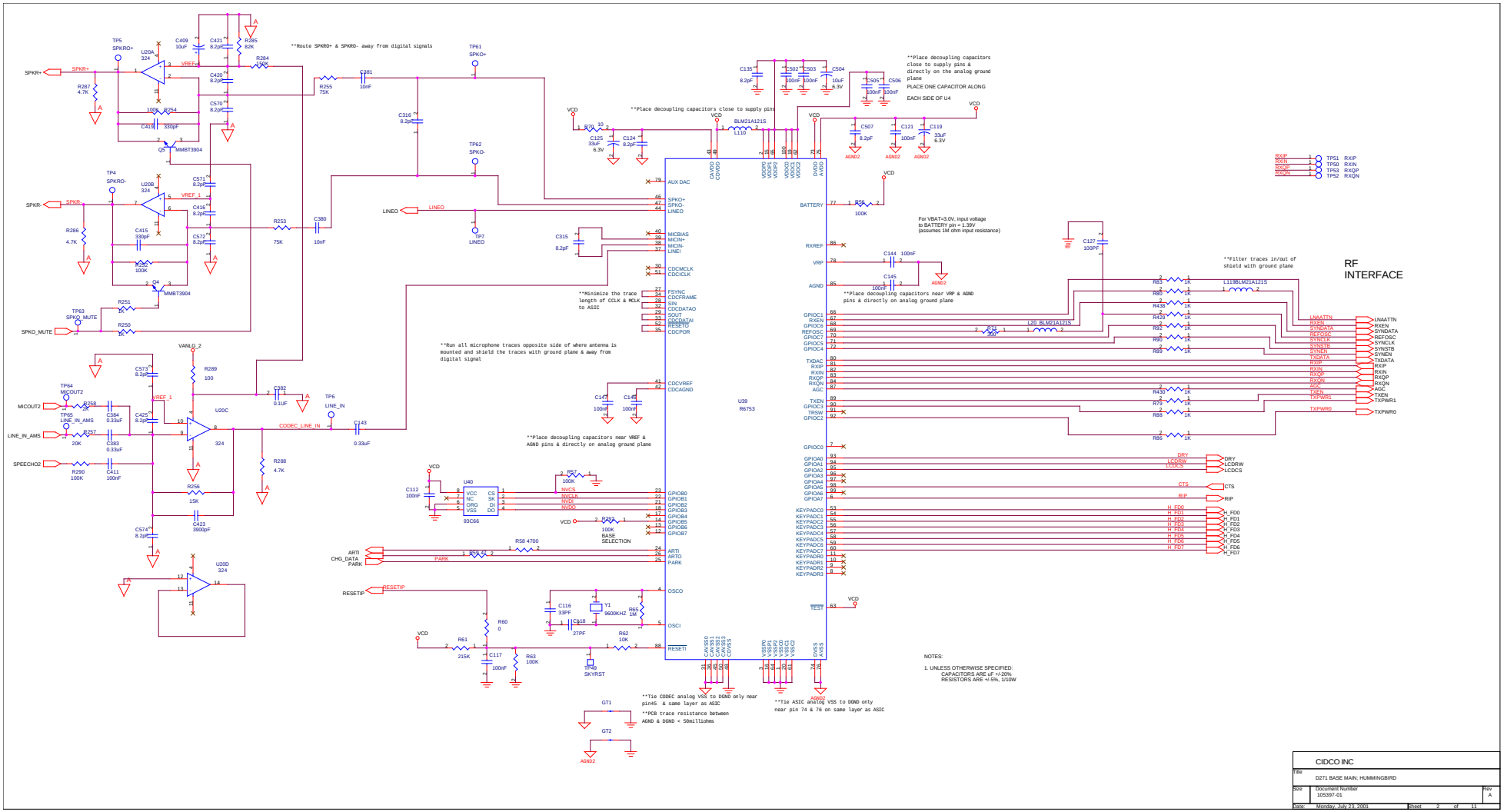
RF INTERFACE
U39
R6753
U20A 324
U20B 324
U20C 324
U20D 324
U40
93C66
Q5 MMBT3904
Q4 MMBT3904
**Route SPKRO+ & SPKRO- away from digital signals
**Place decoupling capacitors close to supply pins
**Place decoupling capacitors close to supply pins & directly on the analog ground plane
PLACE ONE CAPACITOR ALONG
EACH SIDE OF U4
**Minimize the trace length of CCLK & MCLK to ASIC
**Run all microphone traces opposite side of where antenna is mounted and shield the traces with ground plane & away from digital signal
**Place decoupling capacitors near VREF & AGND pins & directly on analog ground plane
**Place decoupling capacitors near VRP & AGND pins & directly on analog ground plane
For VBAT=3.0V, input voltage to BATTERY pin = 1.39V (assumes 1M ohm input resistance)
**Filter traces in/out of shield with ground plane
BASE SELECTION
**Tie CODEC analog VSS to DGND only near pin45 & same layer as ASIC
**PCB trace resistance between AGND & DGND < 50milliohms
**Tie ASIC analog VSS to DGND only near pin 74 & 76 on same layer as ASIC
NOTES:
1. UNLESS OTHERWISE SPECIFIED:
CAPACITORS ARE uF +/-20%
RESISTORS ARE +/-5%, 1/10W
CIDCO INC
Title
D271 BASE MAIN; HUMMINGBIRD
Size
Document Number
105397-01
Rev
A
Date: Monday, July 23, 2001
Sheet 2 of 11

RF105 SHIELD ENCLOSED CIRCUITRY

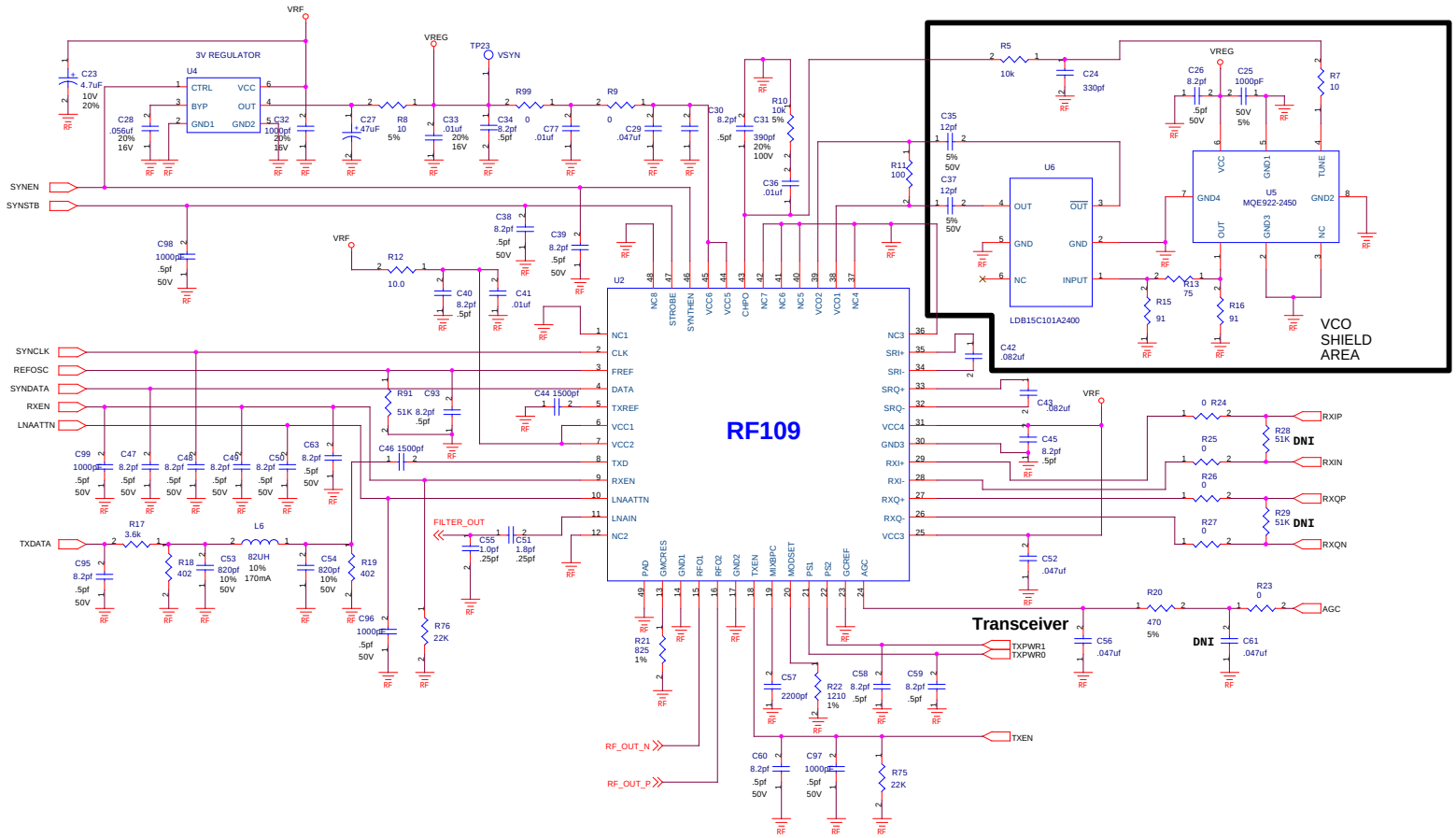

	CIDCO, INC.	
Title	D271 BASE MAIN; RF TRANSCEIVER	
Size C	Document Number 105397-01	Rev A
Date: Monday, July 23, 2001	Sheet 3 of 11	

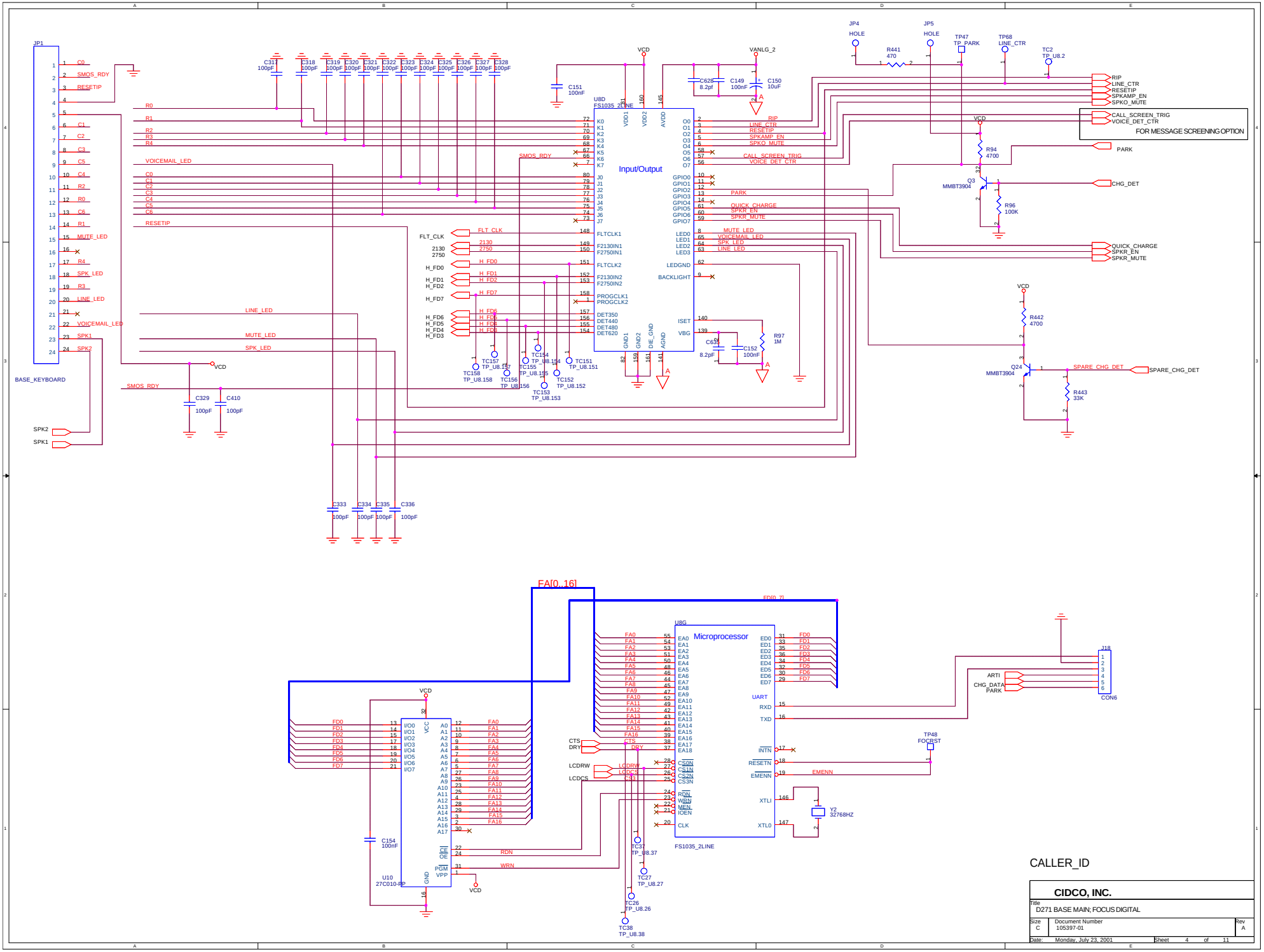
JP1
BASE_KEYBOARD
U8D
FS1035_2LINE
Input/Output
VCD
VANLG_2
JP4
HOLE
JP5
HOLE
TP47
TP_PARK
TP68
LINE_CTR
TC2
TP_U8.2
R441
470
RIP
LINE_CTR
RESETIP
SPKAMP_EN
SPKO_MUTE
CALL_SCREEN_TRIG
VOICE_DET_CTR
FOR MESSAGE SCREENING OPTION
PARK
CHG_DET
Q3
MMBT3904
R94
4700
R96
100K
QUICK_CHARGE
SPKR_EN
SPKR_MUTE
R442
4700
Q24
MMBT3904
SPARE_CHG_DET
R443
33K
FA[0..16]
FD[0..7]
U8G
Microprocessor
FS1035_2LINE
U10
27C010-PP
J18
CON6
ARTI
CHG_DATA
PARK
TP48
FOCRST
Y2
32768HZ
CTS
DRY
LCDRW
LCDCS
RDN
WRN
EMENN
CALLER_ID
CIDCO, INC.
Title
D271 BASE MAIN; FOCUS DIGITAL
Size
C
Document Number
105397-01
Rev
A
Date:
Monday, July 23, 2001
Sheet
4
of
11

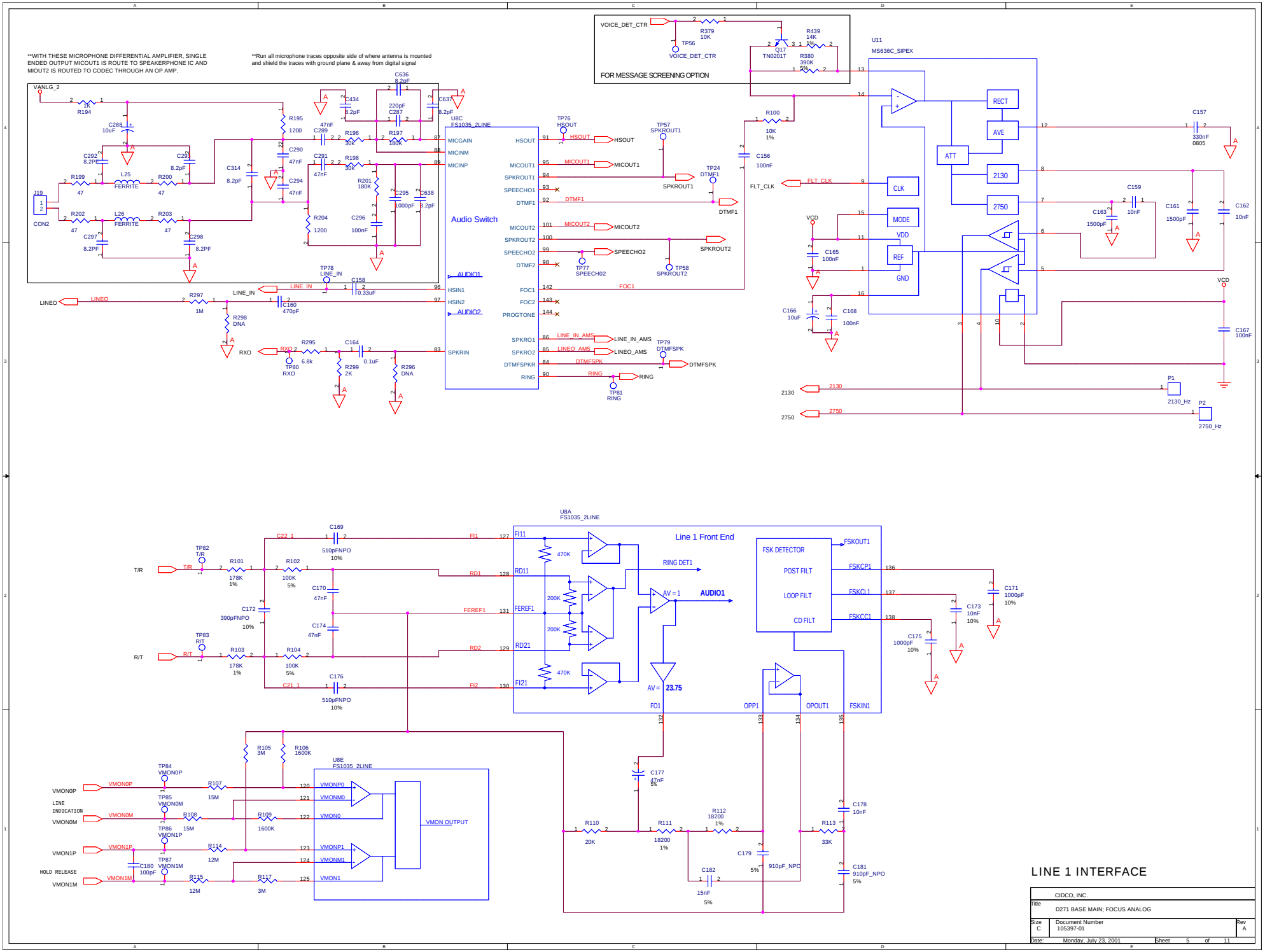
**WITH THESE MICROPHONE DIFFERENTIAL AMPLIFIER, SINGLE ENDED OUTPUT MICOUT1 IS ROUTE TO SPEAKERPHONE IC AND MIOUT2 IS ROUTED TO CODEC THROUGH AN OP AMP.
**Run all microphone traces opposite side of where antenna is mounted and shield the traces with ground plane & away from digital signal
FOR MESSAGE SCREENING OPTION
VOICE_DET_CTR
U8C FS1035_2LINE
Audio Switch
U11 MS636C_SIPEX
RECT
AVE
ATT
2130
2750
CLK
MODE
REF
VDD
GND
U8A FS1035_2LINE
Line 1 Front End
FSK DETECTOR
POST FILT
LOOP FILT
CD FILT
AV = 1
AUDIO1
AV = 23.75
U8E FS1035_2LINE
VMON OUTPUT
LINE INDICATION
HOLD RELEASE
LINE 1 INTERFACE
CIDCO, INC.
D271 BASE MAIN; FOCUS ANALOG
Document Number 105397-01
Monday, July 23, 2001
Sheet 5 of 11

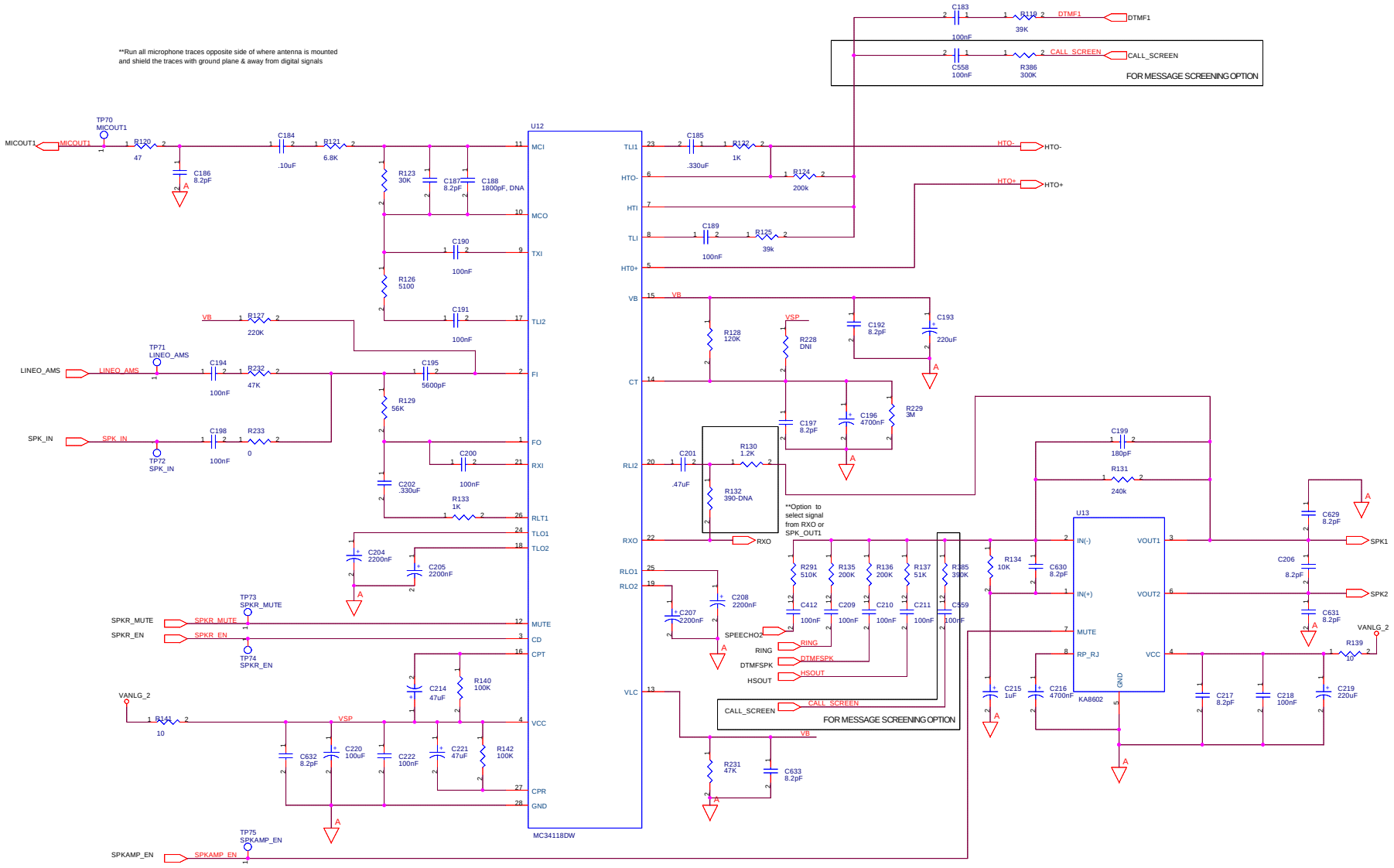

SPEAKER PHONE

CIDCO, INC.

Title: D271 BASE MAIN; SPEAKERPHONE

Size: C | Document Number: 105397-01 | Rev: A

Date: Monday, July 23, 2001 | Sheet 6 of 11

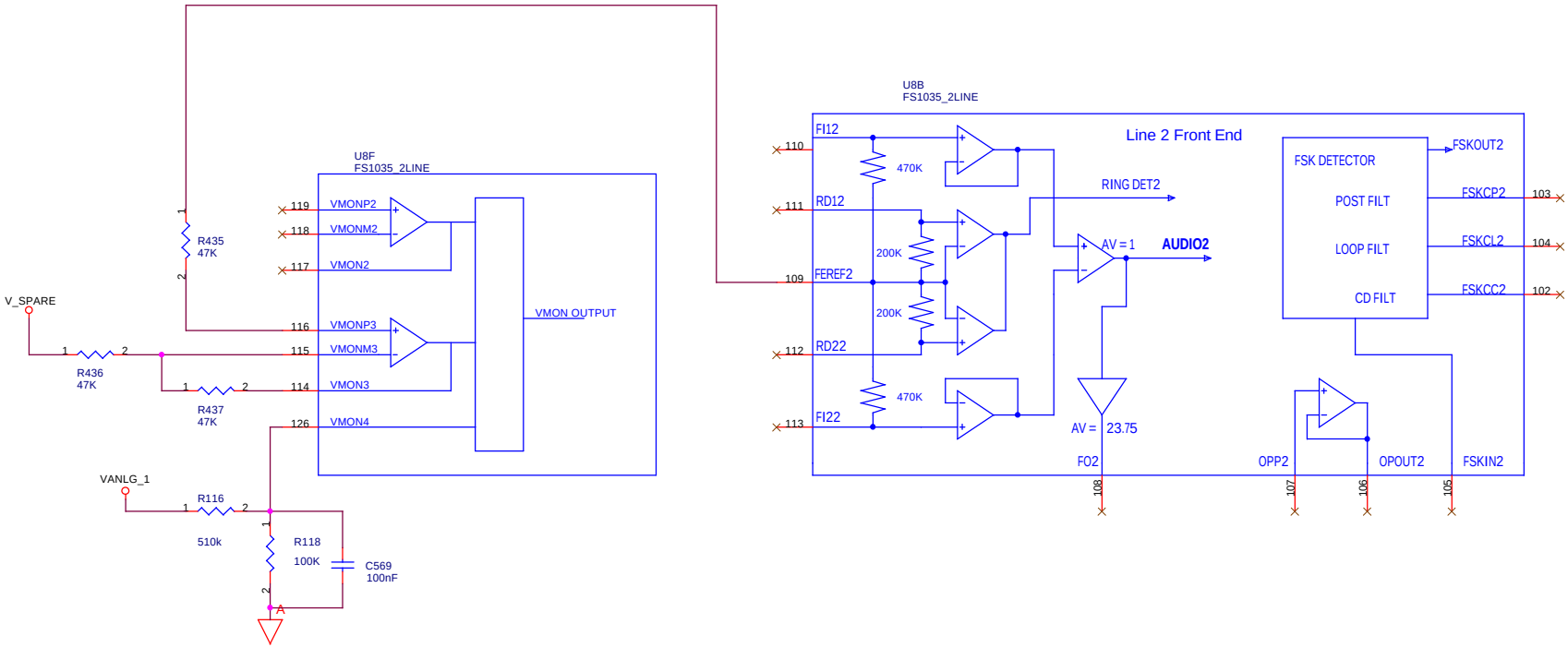

AUDIO INTERFACE

	CIDCO, INC.	
Title	D271 BASE MAIN; FOCUS A TO D	
Size B	Document Number 105397-01	Rev A
Date: Monday, July 23, 2001	Sheet 7 of 11	

THIS PAGE IS FOR MESSAGE SCREENING OPTION

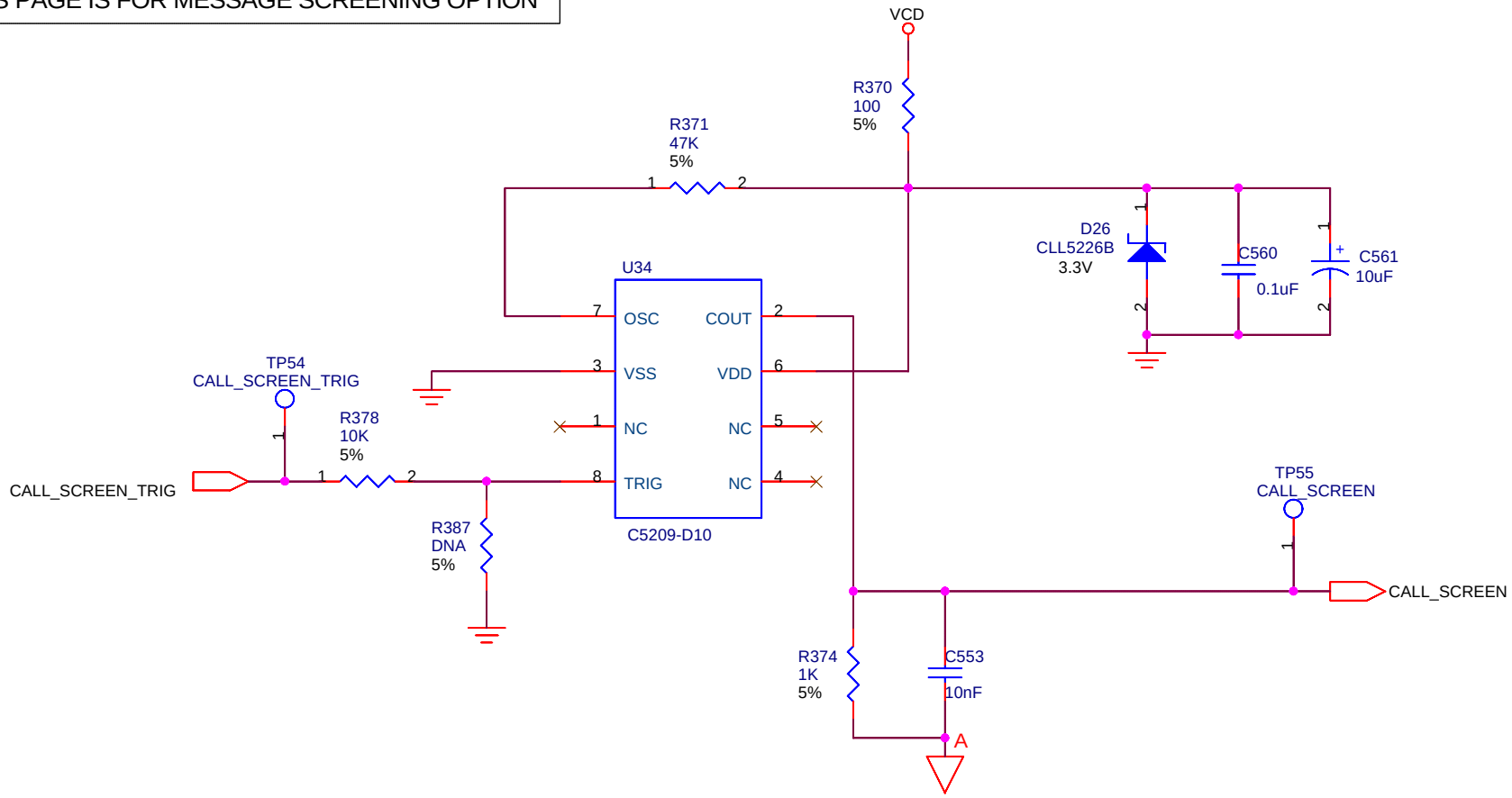

VOICE PROMPT

CIDCO		
Title: D271 BASE MAIN; CALL SCREEN		
Size: A	Document Number: 105397-01	Rev: A
Date: Monday, July 23, 2001	Sheet 8 of 11	

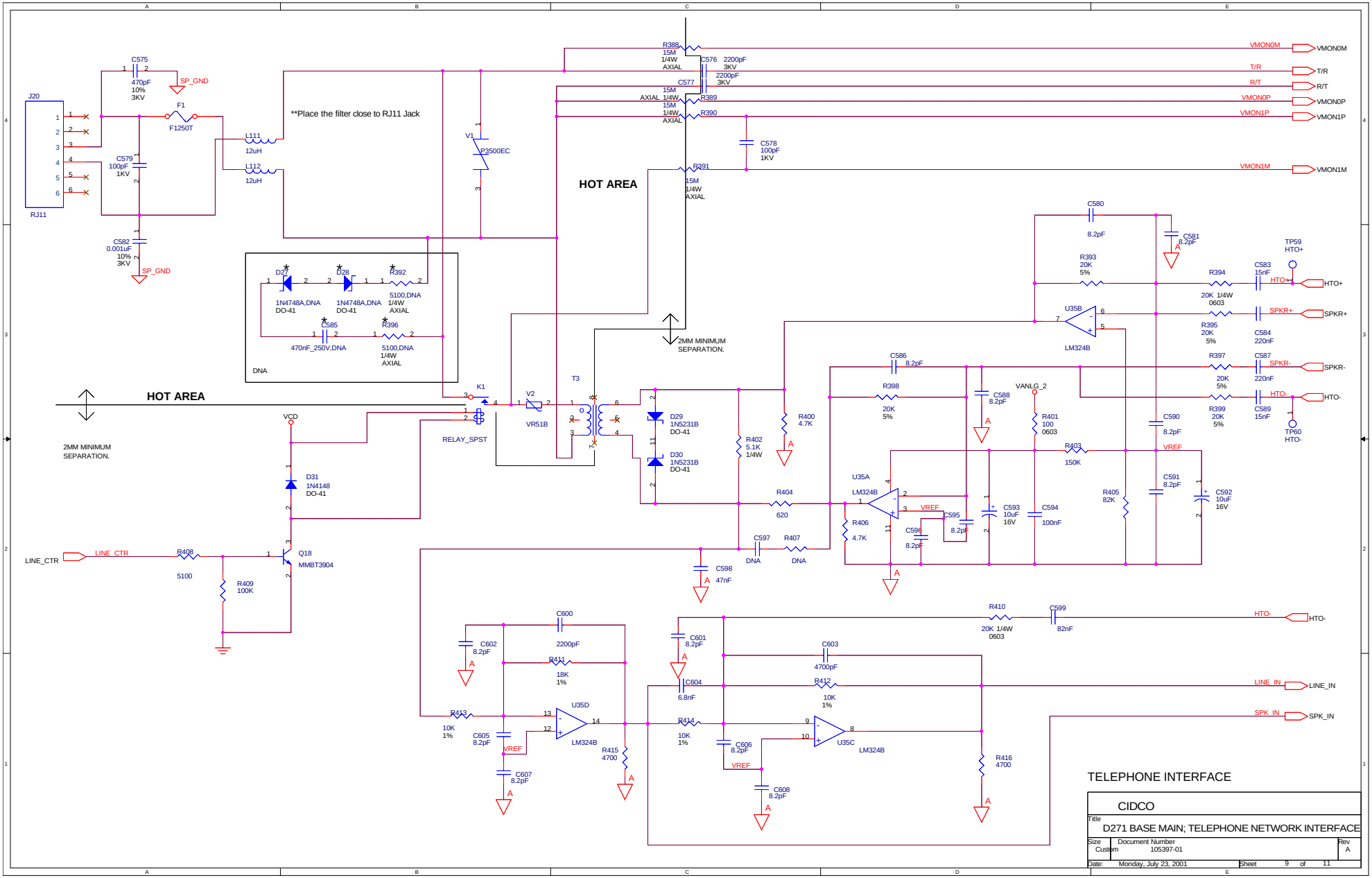

TELEPHONE INTERFACE

CIDCO	
Title	D271 BASE MAIN; TELEPHONE NETWORK INTERFACE
Size: Custom	Document Number: 105397-01 — Rev: A
Date: Monday, July 23, 2001	Sheet 9 of 11

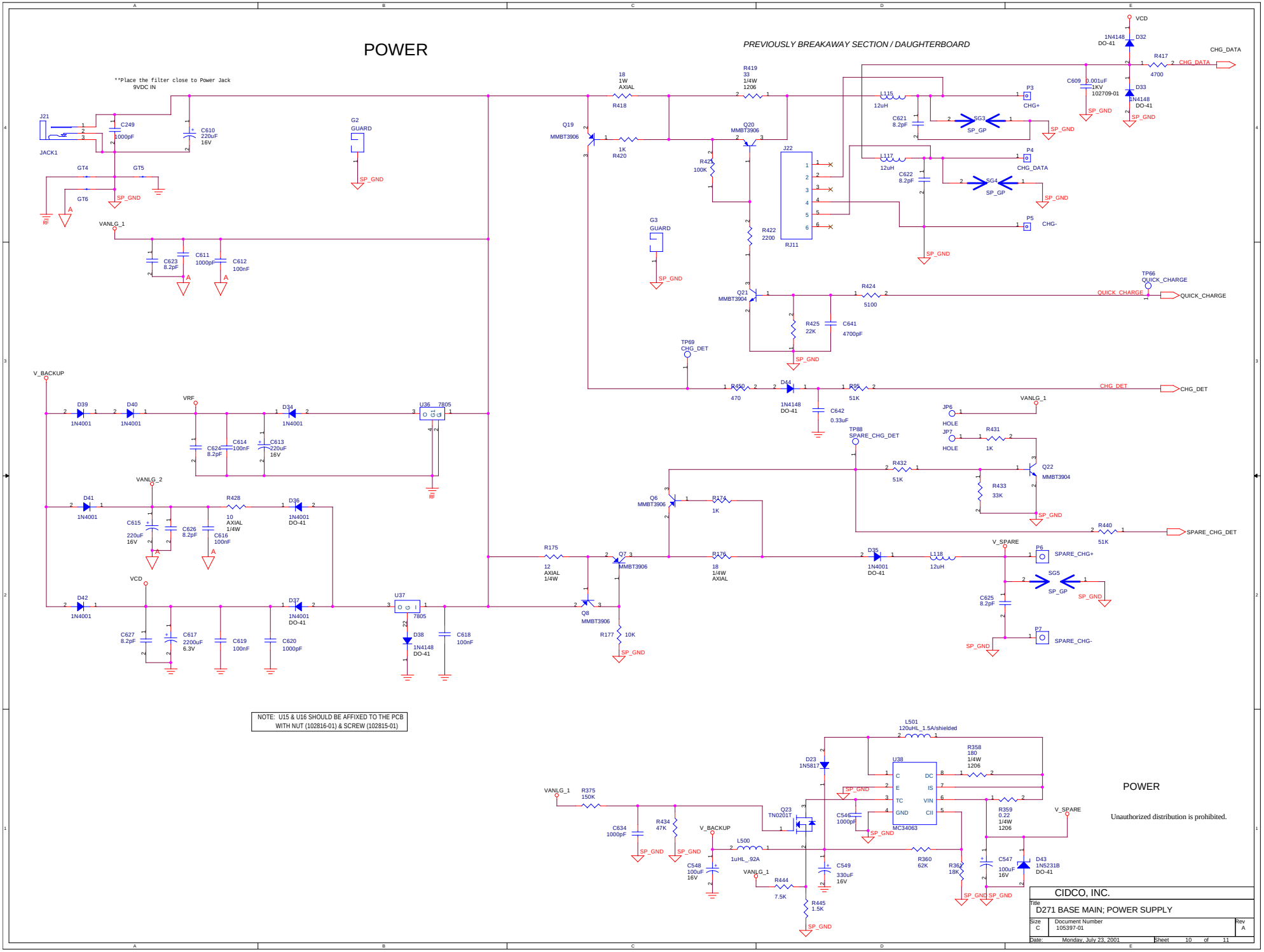
POWER
PREVIOUSLY BREAKAWAY SECTION / DAUGHTERBOARD
**Place the filter close to Power Jack
9VDC IN
J21
JACK1
C249
1000pF
C610
220uF
16V
GT4
GT5
GT6
SP_GND
VANLG_1
C623
8.2pF
C611
1000pF
C612
100nF
G2
GUARD
G3
GUARD
Q19
MMBT3906
18
1W
AXIAL
R418
1K
R420
R419
33
1/4W
1206
Q20
MMBT3906
R421
100K
R422
2200
J22
RJ11
L115
12uH
L117
12uH
C621
8.2pF
C622
8.2pF
SG3
SP_GP
SG4
SP_GP
P3
CHG+
P4
CHG_DATA
P5
CHG-
VCD
1N4148
DO-41
D32
D33
R417
4700
CHG_DATA
C609
0.001uF
1KV
102709-01
Q21
MMBT3904
R424
5100
R425
22K
C641
4700pF
TP66
QUICK_CHARGE
QUICK_CHARGE
TP69
CHG_DET
R450
470
D44
1N4148
DO-41
R95
51K
C642
0.33uF
CHG_DET
V_BACKUP
D39
1N4001
D40
1N4001
VRF
D34
1N4001
U36
7805
C624
8.2pF
C614
100nF
C613
220uF
16V
RF
VANLG_2
D41
1N4001
C615
220uF
16V
C626
8.2pF
R428
10
AXIAL
1/4W
C616
100nF
D36
1N4001
DO-41
VCD
D42
1N4001
C627
8.2pF
C617
2200uF
6.3V
C619
100nF
C620
1000pF
D37
1N4001
DO-41
U37
7805
D38
1N4148
DO-41
C618
100nF
JP6
HOLE
JP7
HOLE
TP88
SPARE_CHG_DET
R431
1K
R432
51K
Q22
MMBT3904
R433
33K
Q6
MMBT3906
R174
1K
R440
51K
SPARE_CHG_DET
R175
12
AXIAL
1/4W
Q7
MMBT3906
R176
18
1/4W
AXIAL
D35
1N4001
DO-41
L118
12uH
V_SPARE
P6
SPARE_CHG+
SG5
SP_GP
C625
8.2pF
P7
SPARE_CHG-
Q8
MMBT3906
R177
10K
NOTE: U15 & U16 SHOULD BE AFFIXED TO THE PCB
WITH NUT (102816-01) & SCREW (102815-01)
L501
120uHL_1.5A/shielded
D23
1N5817
U38
MC34063
R358
180
1/4W
1206
R359
0.22
1/4W
1206
VANLG_1
R375
150K
C634
1000pF
R434
47K
V_BACKUP
Q23
TN0201T
C546
1000pF
L500
1uHL_.92A
C548
100uF
16V
R444
7.5K
C549
330uF
16V
R360
62K
R362
18K
C547
100uF
16V
D43
1N5231B
DO-41
R445
1.5K
POWER
Unauthorized distribution is prohibited.
CIDCO, INC.
Title
D271 BASE MAIN; POWER SUPPLY
Size
C
Document Number
105397-01
Rev
A
Date:
Monday, July 23, 2001
Sheet
10
of
11

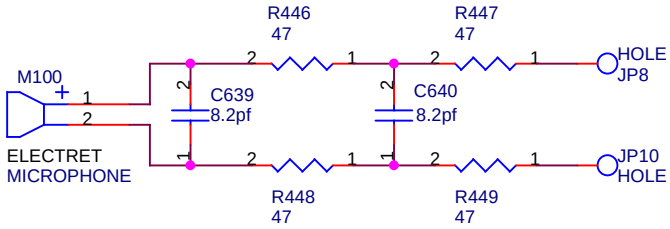

Title

D271 BASE MAIN ; MICROPHONE

Size	Document Number	Rev
A	105397-01	A

Date: Monday, July 23, 2001 Sheet 11 of 11

BOM: 105399-01, REV A

PCB: 105400-01, REV A

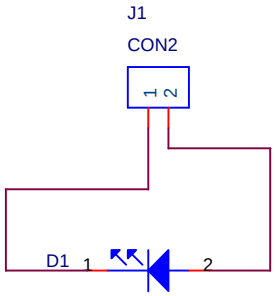

Title	D271 CHARGE LED	
Size A	Document Number 105401-01	Rev A
Date: Friday, July 20, 2001	Sheet 1 of 1	

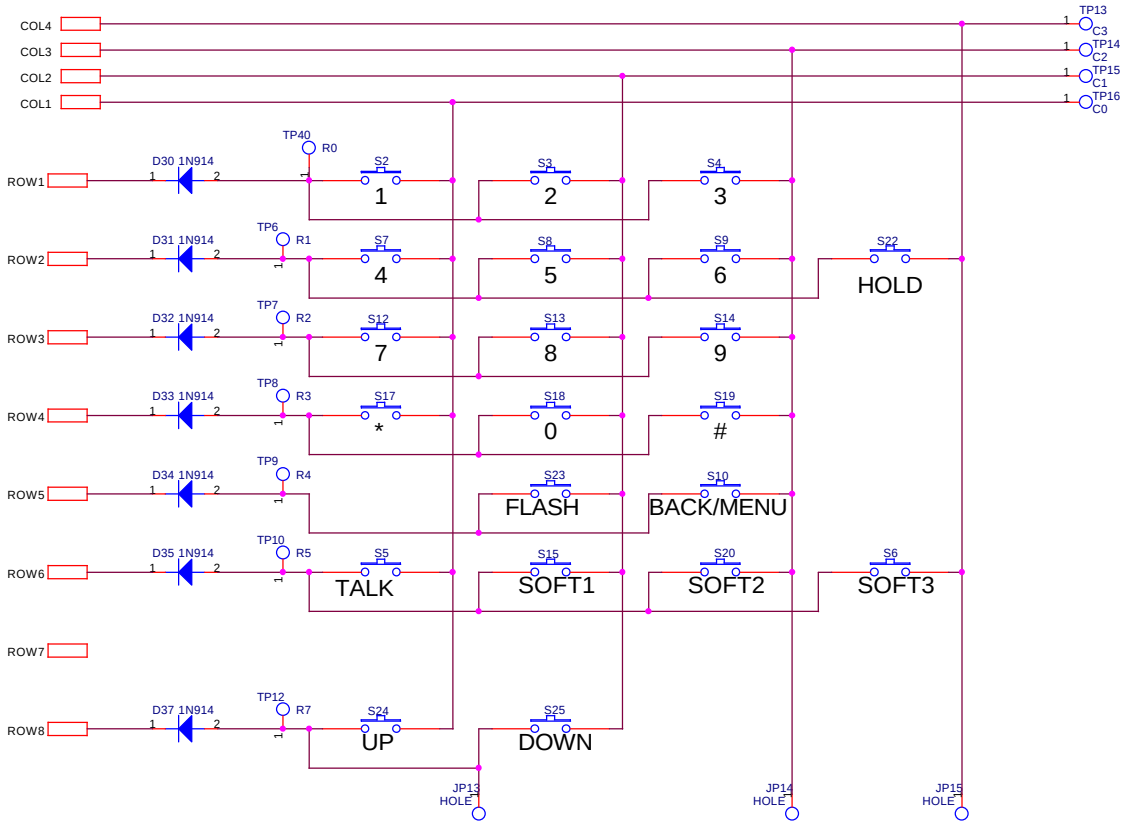

CIDCO, INC.		
Title D271 HANDSET; KEYPAD		
Size B	Document Number 105406-01	Rev A
Date: Monday, July 23, 2001	Sheet 1 of 4	

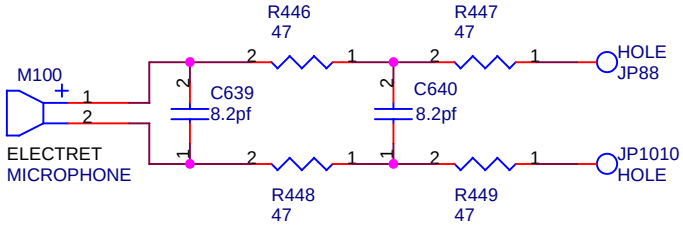

	CIDCO, INC.		
Title	D271 HANDSET; MICROPHONE		
Size	Document Number 105406-01		Rev A
Date: Monday, July 23, 2001		Sheet 2 of 4	

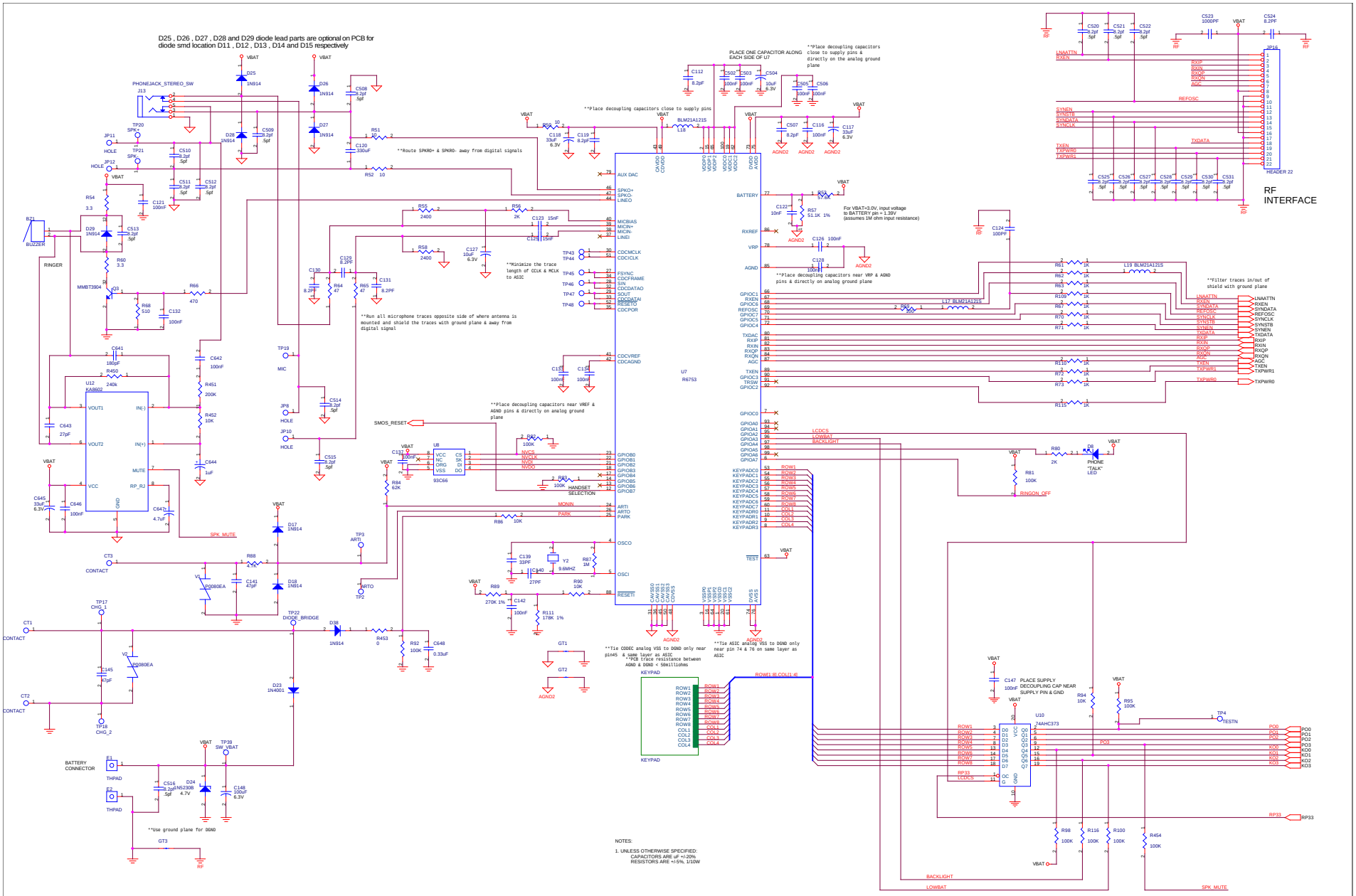

SCHEMATICS: 105406-01, REVA

PCB: 105405-01, REVA

	CIDCO, INC.		
Title	D271 HANDSET; HUMMINGBIRD		
Size	Document Number 105406-01		Rev A
Date:	Monday, July 23, 2001	Sheet 3 of 4	

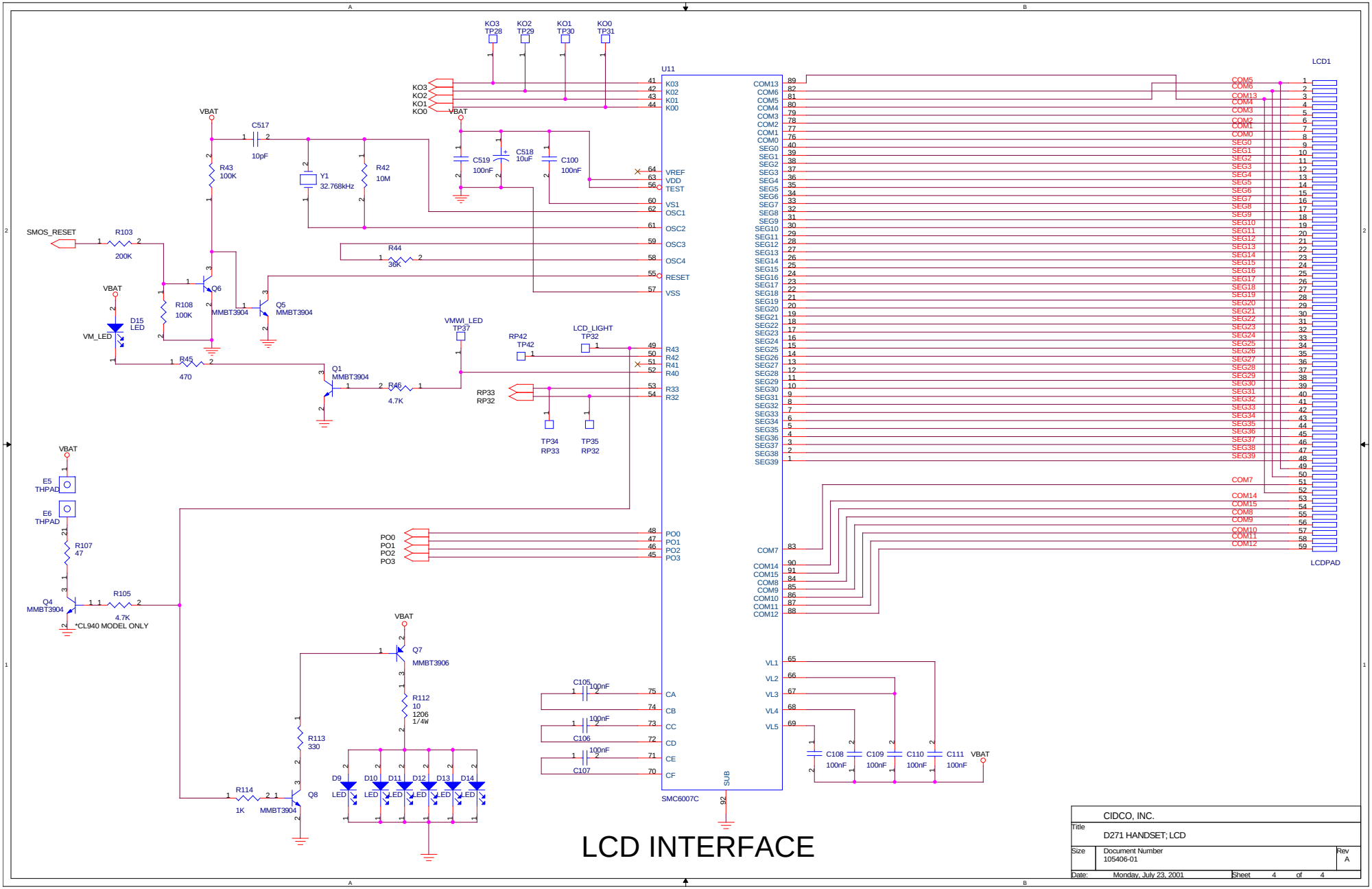
KO3 TP28
KO2 TP29
KO1 TP30
KO0 TP31
U11
SMC6007C
LCD1
LCDPAD
VBAT
C517 10pF
R43 100K
Y1 32.768kHz
R42 10M
C519 100nF
C518 10uF
C100 100nF
SMOS_RESET
R103 200K
R44 36K
Q6 MMBT3904
Q5 MMBT3904
R108 100K
D15 LED
VM_LED
R45 470
Q1 MMBT3904
R46 4.7K
VMWI_LED TP37
RP42 TP42
LCD_LIGHT TP32
RP33 RP32
TP34 RP33
TP35 RP32
E5 THPAD
E6 THPAD
R107 47
Q4 MMBT3904
R105 4.7K
*CL940 MODEL ONLY
Q7 MMBT3906
R112 10 1206 1/4W
R113 330
R114 1K
Q8 MMBT3904
D9 D10 D11 D12 D13 D14
LED
C105 100nF
C106 100nF
C107 100nF
C108 100nF
C109 100nF
C110 100nF
C111 100nF
SUB
LCD INTERFACE
CIDCO, INC.
Title
D271 HANDSET; LCD
Size
Document Number
105406-01
Rev
A
Date: Monday, July 23, 2001
Sheet 4 of 4

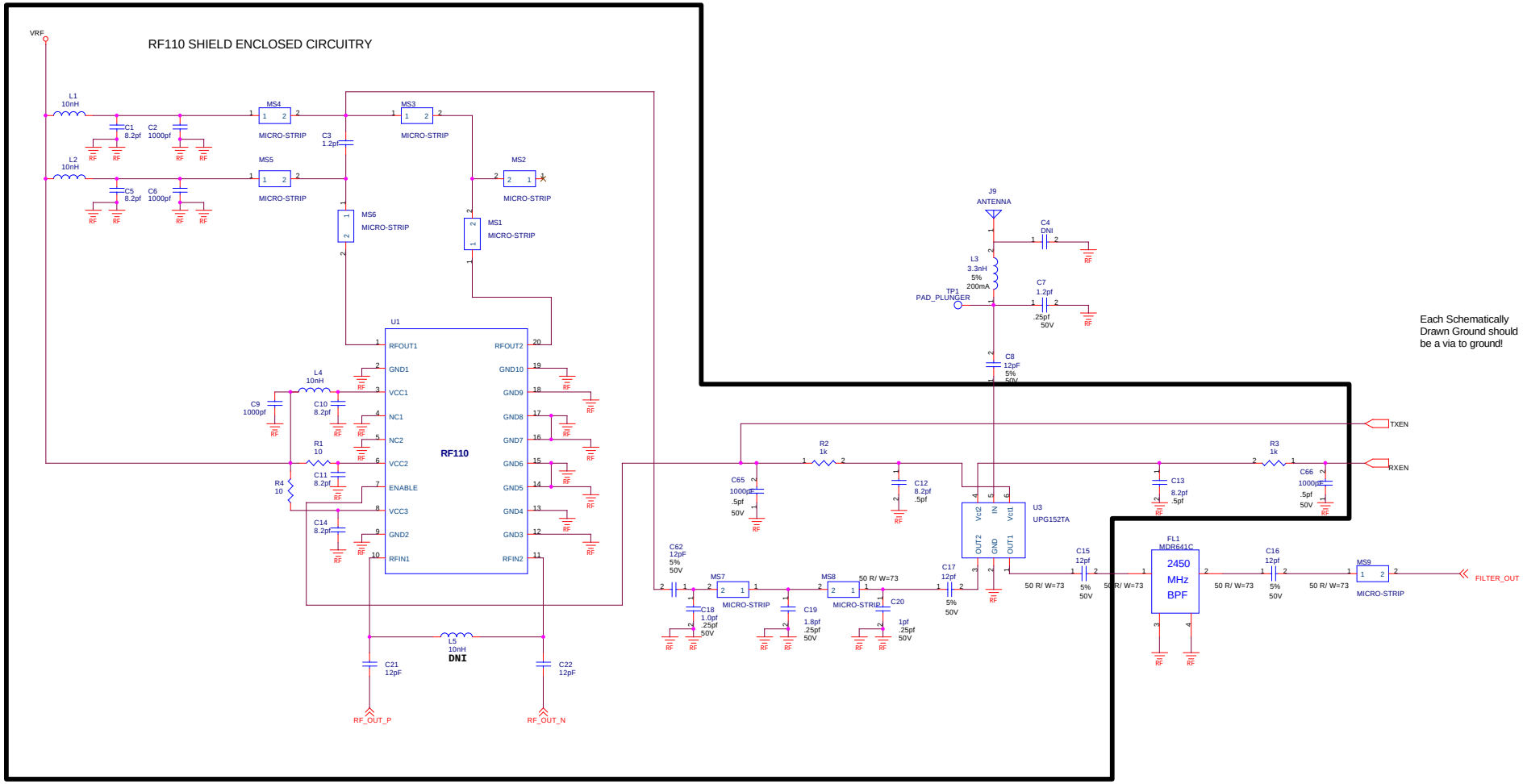

Power Amplifier

	CIDCO, INC.
Title	D271 BASE MAIN; RF PA
Size C	Document Number 105467-01 — Rev A
Date: Tuesday, July 24, 2001	Sheet 1 of 2

RF105 SHIELD ENCLOSED CIRCUITRY

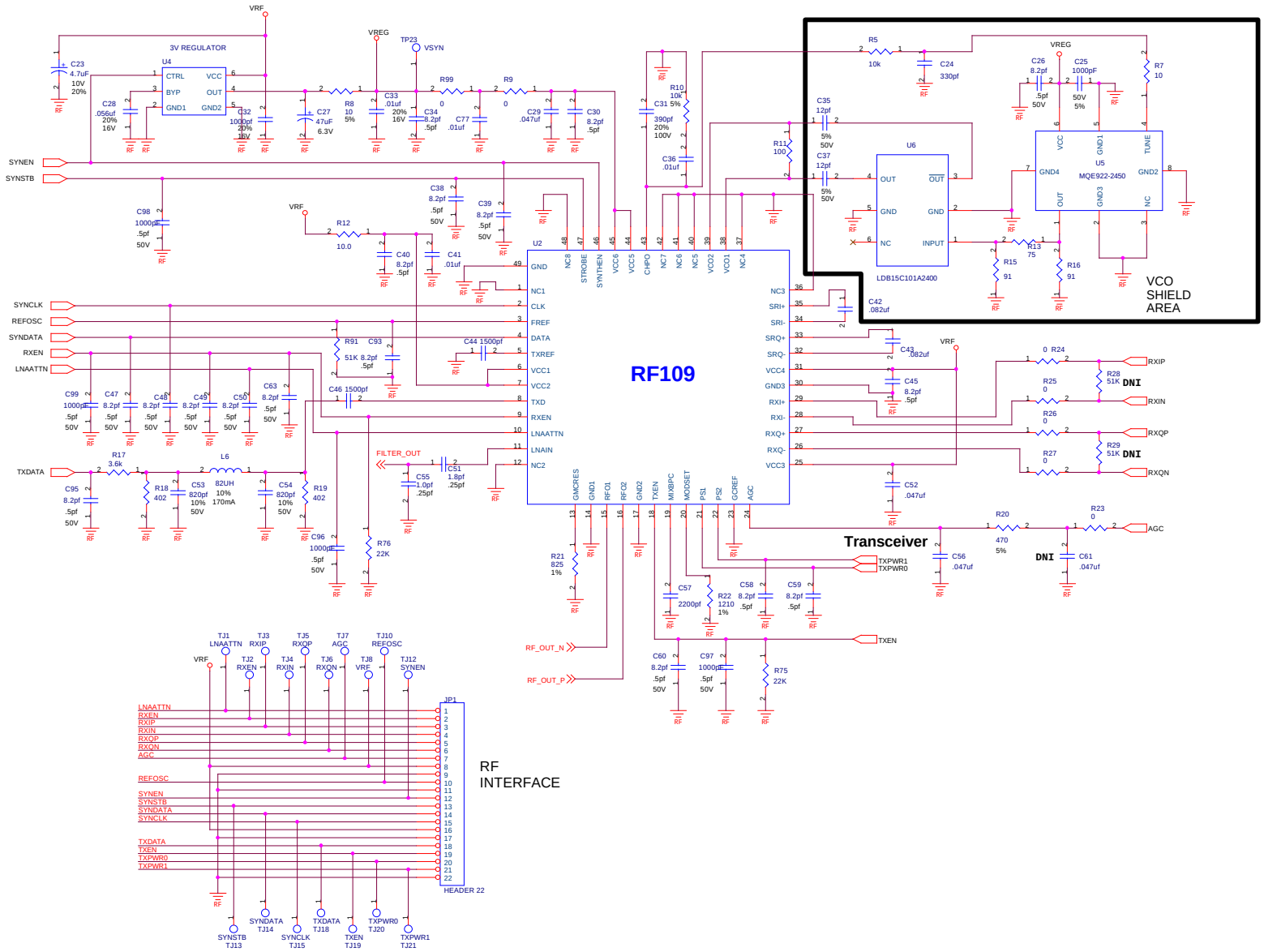

	CIDCO, INC.
Title	D271 HANDSET MAIN; RF TRANSCEIVER
Size C	Document Number 105467-01
Rev	A
Date:	Tuesday, July 24, 2001
Sheet	2 of 2

BOM: 105469-01, REV A
PCB: 105470-01, REVA
SCHEMATIC: 105471-01, REVA

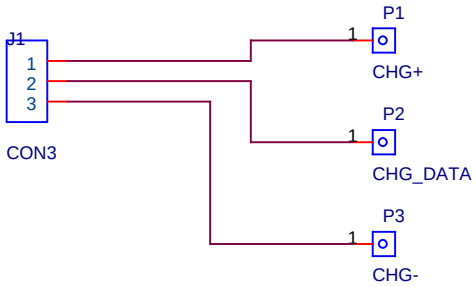

DRAWN BY: M.VU

Title	CHARGER D271	
Size A	Document Number 105471-01	Rev A
Date: Friday, July 20, 2001	Sheet 1 of 1	