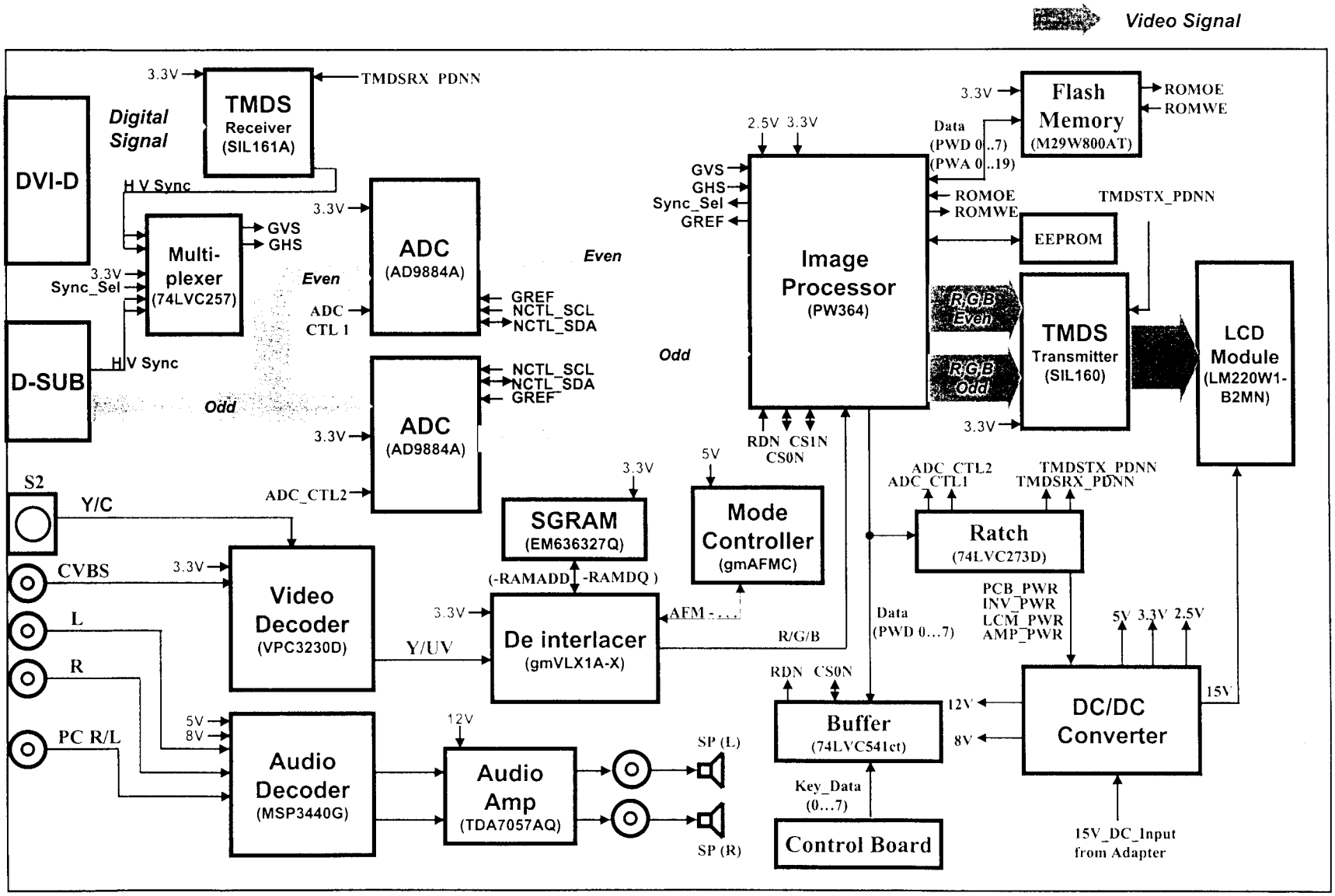I. Block Diagram