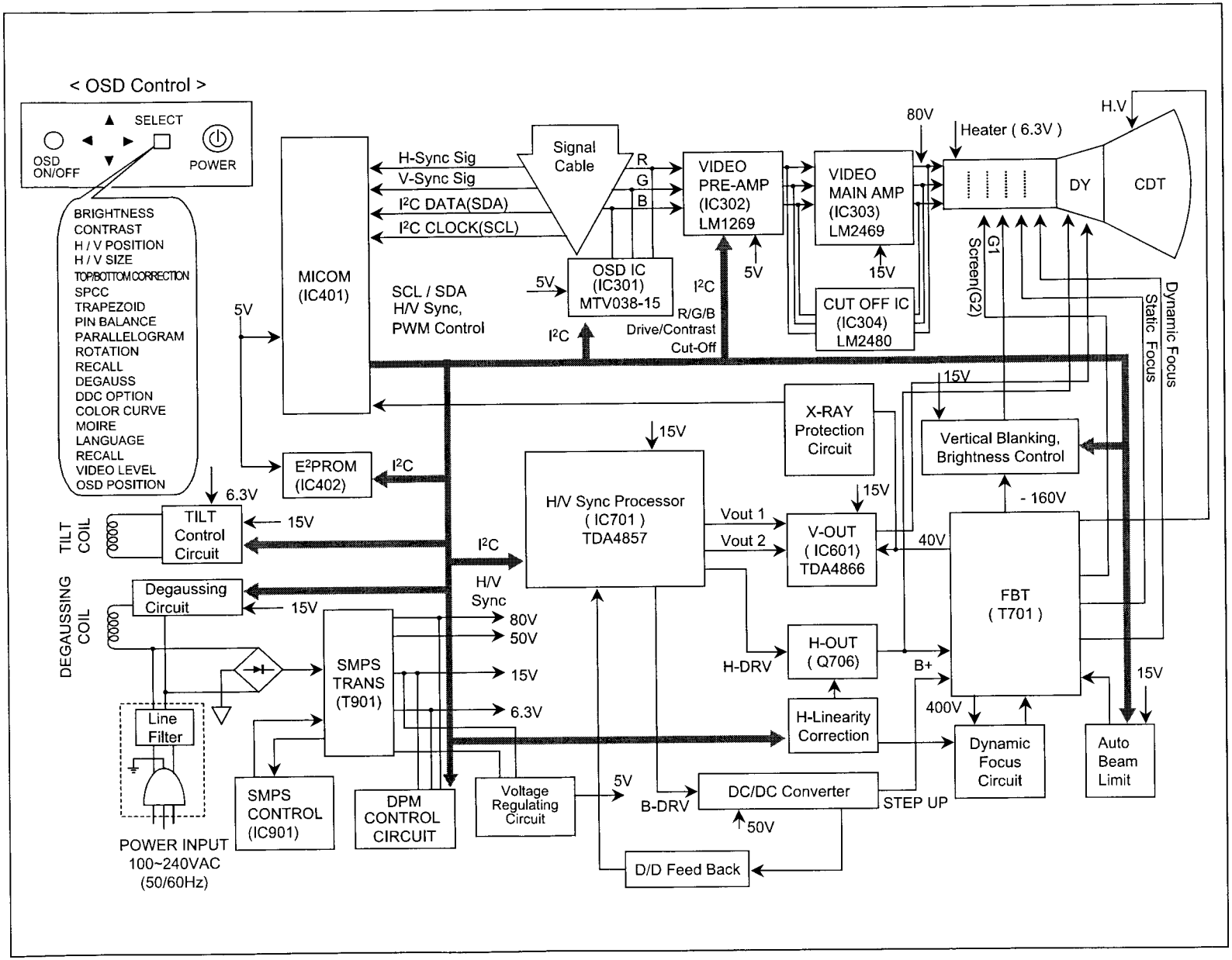BLOCK DIAGRAM