FCC

RF Test Report

Applicant	:	Harman International Industries, Incorporated
Product Type	:	Portable Bluetooth speaker
Trade Name	:	JBL
Model Number	:	CLIP2 FF
Test Specification	:	FCC 47 CFR PART 15 SUBPART C ANSI C63.10:2013
Receive Date	:	Feb. 01, 2016
Test Period	:	Feb. 05 ~ Mar. 15, 2016
Issue Date	:	Mar. 23, 2016

Issue by

A Test Lab Techno Corp.
No. 140-1, Changan Street, Bade District,
Taoyuan City 33465, Taiwan (R.O.C)
Tel：+886-3-2710188 / Fax：+886-3-2710190

Taiwan Accreditation Foundation accreditation number: 1330

Note: *This report shall not be reproduced except in full, without the written approval of A Test Lab Techno Corp. This document may be altered or revised by A Test Lab Techno Corp. personnel only, and shall be noted in the revision section of the document. The client should not use it to claim product endorsement by TAF, or any government agencies. The test results in the report only apply to the tested sample.*

Revision History

Rev.	Issue Date	Revisions	Revised By
00	Mar. 09, 2016	Initial Issue	
01	Mar. 23, 2016	Revised report information.	Peggy Chang

Verification of Compliance

Issued Date: Mar. 23, 2016

Applicant	:	Harman International Industries, Incorporated
Product Type	:	Portable Bluetooth speaker
Trade Name	:	JBL
Model Number	:	CLIP2 FF
FCC ID	:	APIJBLCLIP2FF
EUT Rated Voltage	:	DC 5V, 0.5A
Test Voltage	:	120 Vac / 60 Hz
Applicable Standard	:	FCC 47 CFR PART 15 SUBPART C ANSI C63.10:2013
Test Result	:	Complied
Performing Lab.	:	A Test Lab Techno Corp. No. 140-1, Changan Street, Bade District, Taoyuan City 33465, Taiwan (R.O.C) Tel：+886-3-2710188 / Fax：+886-3-2710190 Taiwan Accreditation Foundation accreditation number: 1330 http://www.atl-lab.com.tw/e-index.htm

A Test Lab Techno Corp. tested the above equipment in accordance with the requirements set forth in the above standards. All indications of Pass/Fail in this report are opinions expressed by A Test Lab Techno Corp. based on interpretations and/or observations of test results. Measurement Uncertainties were not taken into account and are published for informational purposes only. The test results show that the equipment tested is capable of demonstrating compliance with the requirements as documented in this report.

Approved By	: Fly Lu	Reviewed By	: Eric Ou Yang
(Manager)	(Fly Lu)	(Testing Engineer)	(Eric Ou Yang)

TABLE OF CONTENTS

1 General Information 6
1.1. Summary of Test Result 6
1.2. Measurement Uncertainty 6
2 EUT Description 7
3 Test Methodology 8
3.1. Mode of Operation 8
3.2. EUT Exercise Software 8
3.3. Configuration of Test System Details 9
3.4. Test Site Environment 10
4 Maximum Conducted Output Power Measurement 11
4.1. Limit 11
4.2. Test Setup 11
4.3. Test Instruments 11
4.4. Test Procedure 11
4.5. Test Result 12
5 Conducted Emission Measurement 13
5.1. Limit 13
5.2. Test Instruments 13
5.3. Test Setup 13
5.4. Test Procedure 14
5.5. Test Result 15
6 Radiated Interference Measurement 17
6.1. Limit 17
6.2. Test Instruments 17
6.3. Setup 18
6.4. Test Procedure 20
6.5. Test Result 21
7 20dB RF Bandwidth Measurement 29
7.1. Limit 29
7.2. Test Setup 29
7.3. Test Instruments 29
7.4. Test Procedure 30
7.5. Test Result 31
7.6. Test Graphs 32

8 Carrier Frequency Separation Measurement 34
8.1. Limit 34
8.2. Test Setup 34
8.3. Test Instruments 34
8.4. Test Procedure 35
8.5. Test Result 36
8.6. Test Graphs 37
9 Number of Hopping Measurement 39
9.1. Limit 39
9.2. Test Setup 39
9.3. Test Instruments 39
9.4. Test Procedure 39
9.5. Test Result 40
9.6. Test Graphs 41
10 Time of Occupancy (Dwell Time) Measurement 43
10.1. Limit 43
10.2. Test Setup 43
10.3. Test Instruments 43
10.4. Test Procedure 43
10.5. Test Result 44
10.6. Test Graphs 46
11 Out of Band Conducted Emissions Measurement 48
11.1. Limit 48
11.2. Test Setup 48
11.3. Test Instruments 48
11.4. Test Procedure 48
11.5. Test Graphs 49
12 Antenna Measurement 53
12.1. Limit 53
12.2. Antenna Connector Construction 53

1 General Information

1.1. Summary of Test Result

FCC Standard	Item	Result	Remark
15.207	AC Power Conducted Emission	PASS	-----
15.203	Antenna Requirement	PASS	-----
15.247(b)(1)	Max. Output Power	PASS	-----
15.247(d)	Transmitter Radiated Emissions	PASS	-----
15.247(a)(1)	20dB RF Bandwidth	PASS	-----
15.247(a)(1)	Carrier Frequency Separation	PASS	-----
15.247(a)(1)(iii)	Number of Hopping	PASS	-----
15.247(a)(1)(iii)	Time of Occupancy (Dwell Time)	PASS	-----
15.247(d)	Out of Band Conducted Spurious Emission	PASS	-----

The test results of this report relate only to the tested sample(s) identified in this report. Manufacturer or whom it may concern should recognize the pass or fail of the test result.

1.2. Measurement Uncertainty

Test Item	Frequency Range	Uncertainty (dB)
Conducted Emission	9kHz ~ 150KHz	2.7
	150kHz ~ 30MHz	2.8
Radiated Emission	9kHz ~ 30MHz	1.457
	30MHz ~ 1000MHz	6.300
	1000MHz ~ 18000MHz	5.474
	18000MHz ~ 26500MHz	5.630
	26500MHz ~ 40000MHz	5.054

2 EUT Description

Applicant	Harman International Industries, Incorporated 8500 Balboa Blvd, Northridge, CA 91329, UNITED STATES				
Manufacturer	Harman International Industries, Incorporated 8500 Balboa Blvd, Northridge, CA 91329, UNITED STATES				
Product	Portable Bluetooth speaker				
Trade Name	JBL				
Model Number	CLIP2 FF				
FCC ID	APIJBLCLIP2FF				
Frequency Range	2402 ~ 2480 MHz				
Modulation Type	GFSK for 1Mbps				
	π/4-DQPSK for 2Mbps				
	8DPSK for 3Mbps				
Antenna Type	PCB Antenna				
Antenna Gain	0 dBi				
RF Output Power	GFSK for 1Mbps	4.63	dBm /	0.00290	W
(Conducted)	π/4-DQPSK for 2Mbps	3.79	dBm /	0.00239	W
	8DPSK for 3Mbps	4.29	dBm /	0.00269	W

3 Test Methodology

3.1. Mode of Operation

Decision of Test ATL has verified the construction and function in typical operation. All the test modes were carried out with the EUT in normal operation, which was shown in this test report and defined as:

Pre-Test Mode
Mode 1: TX Mode
Mode 2: GFSK TX Mode
Mode 3: π/4-DQPSK Link Mode
Mode 4: 8DPSK TX Mode

By preliminary testing and verifying three axis (X, Y and Z) position of EUT transmitted status, it was found that "X axis" position was the worst, then the final test was executed the worst condition and test data were recorded in this report.

Final-Test Mode
Mode 1: TX Mode
Mode 2: GFSK TX Mode
Mode 4: 8DPSK TX Mode

Description of Test Modes

Preliminary tests were performed in different modulation to find the worst case. The modulation has shown the worst-case in section 4.5. Investigation has been done on all the possible configurations for searching the worst cases. GFSK and 8DPSK are the worst mode to be reported.

Tested System Details

The types for all equipments, plus descriptions of all cables used in the tested system (including inserted cards) are:

Product		Manufacturer	Model Number	Serial Number	Power Cord
1.	Bluetooth Tester	R & S	CBT	100350	NA

3.2. EUT Exercise Software

1	Setup the EUT and Bluetooth Tester (CBT) as shown on 3.3.
2	Turn on the power of all equipment.
3	Open Bluetooth function link to CBT.
4	EUT run test program.

Measurement Software	
1	EZ-EMC Ver. ATL-03A1-1
2	EZ-EMC Ver ATL-ITC-3A1-1

3.3. Configuration of Test System Details

Conducted Emissions

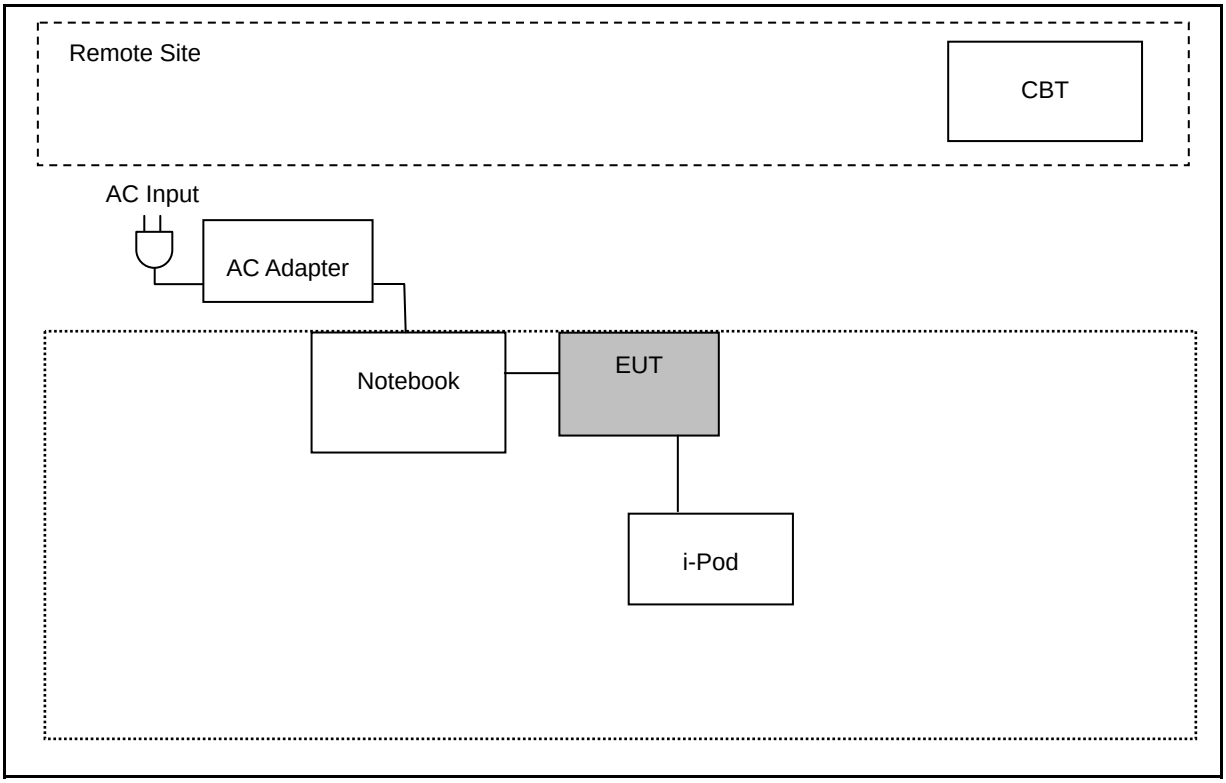

Radiated Emissions

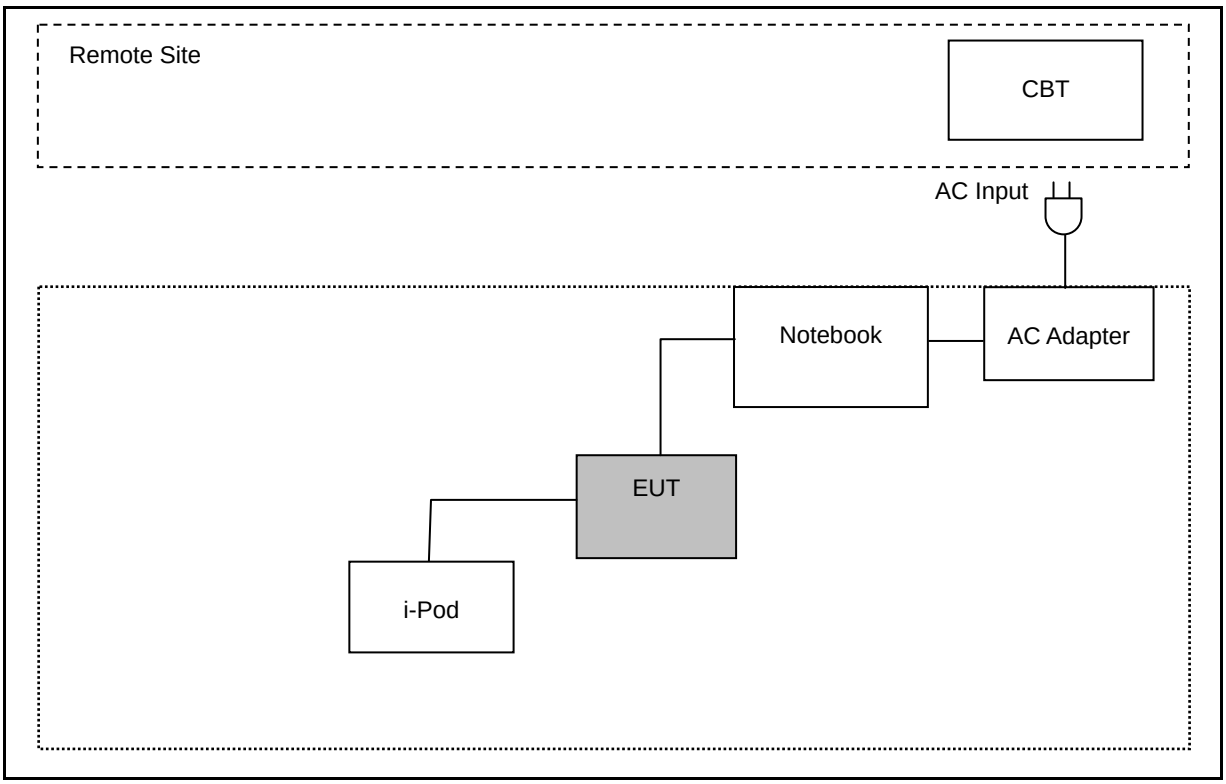

3.4. Test Site Environment

Items	Required (IEC 60068-1)	Actual
Temperature (°C)	15-35	26
Humidity (%RH)	25-75	60
Barometric pressure (mbar)	860-1060	950

4 Maximum Conducted Output Power Measurement

4.1. Limit

For frequency hopping systems operating in the 2400–2483.5 MHz band employing at least 75 non-overlapping hopping channels < 0.125 watt.

4.2. Test Setup

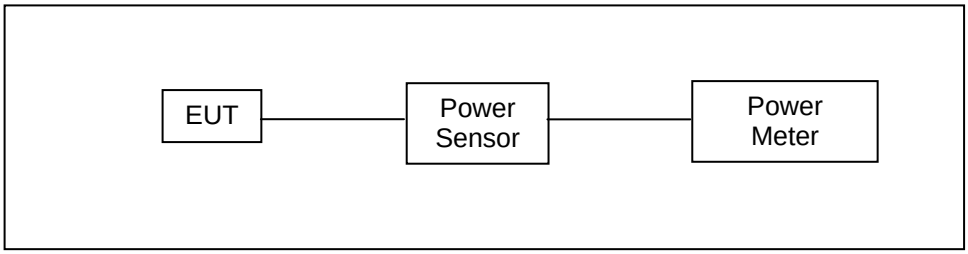

4.3. Test Instruments

Equipment	Manufacturer	Model Number	Serial Number	Cal. Date	Remark
Single Channel PK Power Sensor	Agilent	N1911A	MY45101619	12/11/2015	(1)
Wideband Power Meter	Agilent	N1921A	MY45241957	12/11/2015	(1)
Microwave Cable	EMCI	EMC104-SM-SM-1500	140303	02/24/2015	(1)
Test Site	ATL	TE05	TE05	N.C.R.	-----

Remark: (1) Calibration period 1 year.
NOTE: N.C.R. = No Calibration Request.

4.4. Test Procedure

Testing must be done according to this procedure, FCC Public Notice DA 00-705 - Filing and Measurement Guidelines for Frequency Hopping Spread Spectrum Systems. This is the only method recognized by the FCC. The tests below are run with the EUT's transmitter set at high power in TX mode. The EUT is needed to force selection of output power level and channel number. While testing, EUT was set to transmit continuously. Remove the Subjective device's antenna and connect the RF output port to power sensor. The maximum peak output power shall not exceed 1 watt.
Use a direct connection between the antenna port of transmitter and the power sensor, for prevent the power sensor input attenuation 40-50 dB. Set the RBW Bandwidth of the emission or use a channel power meter mode.
For antennas with gains of 6 dBi or less, maximum allowed transmitter output is 1 watt (+30 dBm). For antennas with gains greater than 6 dBi, transmitter output level must be decreased by an amount equal to (GAIN - 6)/3 dBm.
The antenna port of the EUT was connected to the input of a power sensor. Power was read directly and cable loss correction was added to the reading to obtain power at the EUT antenna terminals.

4.5. Test Result

Model Number	CLIP2 FF		
Test Item	Maximum Conducted Output Power		
Test Mode	Mode 2 / Mode 3 / Mode 4		
Date of Test	02/22/2016	Test Site	TE02

Test Mode	Frequency (MHz)	Packet Type	Average Power		Peak Power		Limit (W)
			(dBm)	(W)	(dBm)	(W)	
Mode 2	2402	DH1	-5.27	0.00030	0.31	0.00107	< 0.125
		DH3	-1.98	0.00063	0.32	0.00108	< 0.125
		DH5	-1.32	0.00074	0.33	0.00108	< 0.125
	2441	DH1	-1.06	0.00078	4.61	0.00289	< 0.125
		DH3	2.25	0.00168	4.62	0.00290	< 0.125
		DH5	2.92	0.00196	**4.63**	**0.00290**	< 0.125
	2480	DH1	-1.22	0.00076	4.34	0.00272	< 0.125
		DH3	2.04	0.00160	4.36	0.00273	< 0.125
		DH5	2.69	0.00186	4.37	0.00274	< 0.125
Mode 3	2402	2DH1	-7.39	0.00018	-0.26	0.00094	< 0.125
		2DH3	-4.61	0.00035	-0.22	0.00095	< 0.125
		2DH5	-3.97	0.00040	-0.18	0.00096	< 0.125
	2441	2DH1	-3.47	0.00045	3.68	0.00233	< 0.125
		2DH3	-0.69	0.00085	3.76	0.00238	< 0.125
		2DH5	-0.08	0.00098	**3.79**	**0.00239**	< 0.125
	2480	2DH1	-3.59	0.00044	3.51	0.00224	< 0.125
		2DH3	-0.81	0.00083	3.58	0.00228	< 0.125
		2DH5	-0.18	0.00096	3.65	0.00232	< 0.125
Mode 4	2402	3DH1	-7.33	0.00018	0.05	0.00101	< 0.125
		3DH3	-4.53	0.00035	0.19	0.00104	< 0.125
		3DH5	-3.94	0.00040	0.28	0.00107	< 0.125
	2441	3DH1	-3.42	0.00045	4.11	0.00258	< 0.125
		3DH3	-0.63	0.00086	4.16	0.00261	< 0.125
		3DH5	-0.03	0.00099	**4.29**	**0.00269**	< 0.125
	2480	3DH1	-3.54	0.00044	4.06	0.00255	< 0.125
		3DH3	-0.75	0.00084	4.09	0.00256	< 0.125
		3DH5	-0.15	0.00097	4.13	0.00259	< 0.125

Note: The relevant measured result has the offset with cable loss already.

5 Conducted Emission Measurement

5.1. Limit

Frequency (MHz)	Quasi-peak	Average
0.15 - 0.5	66 to 56	56 to 46
0.50 - 5.0	56	46
5.0 - 30.0	60	50

5.2. Test Instruments

Describe	Manufacturer	Model Number	Serial Number	Cal. Date	Remark
Test Receiver	R&S	ESCI	100367	06/25/2015	(1)
LISN	R&S	ENV216	101040	03/11/2016	(1)
LISN	R&S	ENV216	101041	03/07/2016	(1)
RF Cable	Woken	00100D1380194M	TE-02-02	06/26/2015	(1)
Test Site	ATL	TE02	TE02	N.C.R.	-----

Remark: (1) Calibration period 1 year.
NOTE: N.C.R. = No Calibration Request.

5.3. Test Setup

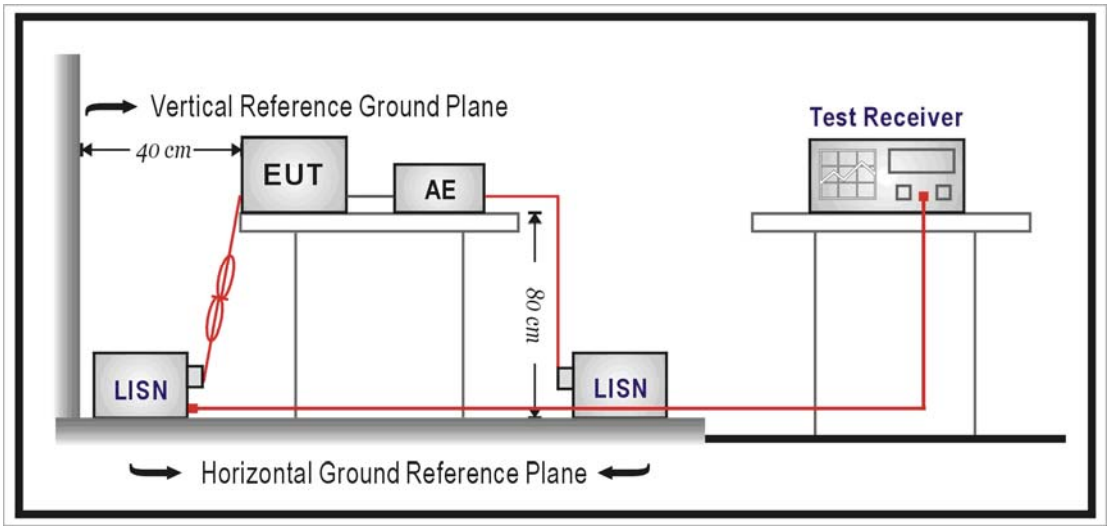

5.4. Test Procedure

The EUT and simulators are connected to the main power through a line impedance stabilization network (L.I.S.N.). This provides a 50 ohm /50uH coupling impedance for the measuring equipment. The peripheral devices are also connected to the main power through a LISN that provides a 50ohm/50uH coupling impedance with 50ohm termination.

For A.C. mains conducted interference, measured both sides of A.C. lines and carried out using quasi-peak and average detector receivers of maximum conducted interference.

Conducted emissions were invested over the frequency range from 0.15 MHz to 30 MHz using a receiver bandwidth of 9 kHz. The equipment under test (EUT) shall be meet the limits in section 5.1, as applicable, including the average limit and the quasi-peak limit when using respectively, an average detector and quasi-peak detector measured in accordance with the methods described of related standard. The voltage limits shall be met. If the average limit is met when using a quasi-peak detector receiver, the EUT shall be deemed to meet both limits and measurement with the average detector receiver is unnecessary.

If the reading of the measuring receiver shows fluctuations close to the limit, the reading shall be observed for at least 15 s at each measurement frequency; the higher reading shall be recorded with the exception of any brief isolated high reading which shall be ignored.

5.5. Test Result

Standard:	FCC Part 15C	Line:	L1
Test item:	Conducted Emission	Power:	AC 120V/60Hz
Model Number:	CLIP2 FF	Temp.(℃)/Hum.(%RH):	26(℃)/60%RH
Mode:	1	Date:	03/15/2016
		Test By:	Eric Ou Yang
Description:			

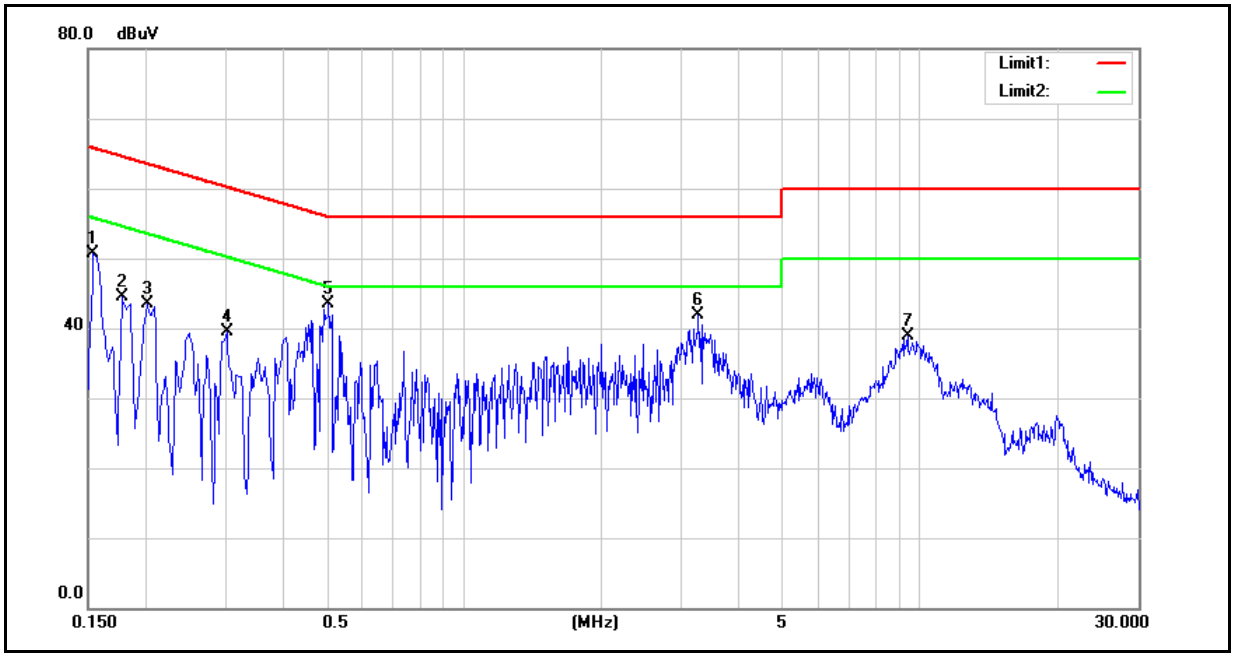

No.	Frequency (MHz)	QP reading (dBuV)	AVG reading (dBuV)	Correction factor (dB)	QP result (dBuV)	AVG result (dBuV)	QP limit (dBuV)	AVG limit (dBuV)	QP margin (dB)	AVG margin (dB)	Remark
1	0.1540	39.46	26.06	9.60	49.06	35.66	65.78	55.78	-16.72	-20.12	Pass
2	0.1780	30.07	6.60	9.59	39.66	16.19	64.58	54.58	-24.92	-38.39	Pass
3	0.2020	32.15	19.62	9.59	41.74	29.21	63.53	53.53	-21.79	-24.32	Pass
4	0.3020	25.30	15.59	9.60	34.90	25.19	60.19	50.19	-25.29	-25.00	Pass
5	0.5060	31.10	19.56	9.61	40.71	29.17	56.00	46.00	-15.29	-16.83	Pass
6	3.2660	25.83	15.99	9.74	35.57	25.73	56.00	46.00	-20.43	-20.27	Pass
7	9.3700	23.87	18.66	9.87	33.74	28.53	60.00	50.00	-26.26	-21.47	Pass

Note: 1. Result (dBuV) = Correction factor (dB) + Reading(dBuV).
2. Correction factor (dB) = Cable loss (dB) + L.I.S.N. factor (dB).

Standard:	FCC Part 15C	Line:	N
Test item:	Conducted Emission	Power:	AC 120V/60Hz
Model Number:	CLIP2 FF	Temp.(℃)/Hum.(%RH):	26(℃)/60%RH
Mode:	1	Date:	03/15/2016
		Test By:	Eric Ou Yang
Description:			

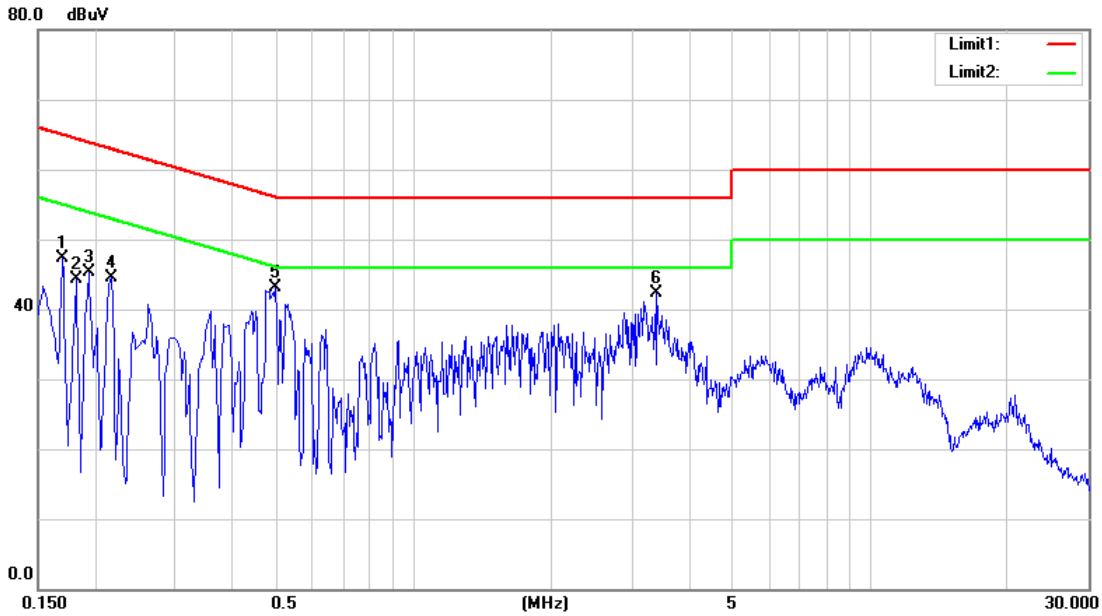

No.	Frequency (MHz)	QP reading (dBuV)	AVG reading (dBuV)	Correction factor (dB)	QP result (dBuV)	AVG result (dBuV)	QP limit (dBuV)	AVG limit (dBuV)	QP margin (dB)	AVG margin (dB)	Remark
1	0.1700	31.24	8.30	9.59	40.83	17.89	64.96	54.96	-24.13	-37.07	Pass
2	0.1820	28.86	8.56	9.58	38.44	18.14	64.39	54.39	-25.95	-36.25	Pass
3	0.1940	34.21	22.66	9.58	43.79	32.24	63.86	53.86	-20.07	-21.62	Pass
4	0.2180	28.03	7.00	9.58	37.61	16.58	62.89	52.89	-25.28	-36.31	Pass
5	0.4980	31.16	17.76	9.60	40.76	27.36	56.03	46.03	-15.27	-18.67	Pass
6	3.4100	24.32	15.56	9.73	34.05	25.29	56.00	46.00	-21.95	-20.71	Pass

Note: 1. Result (dBuV) = Correction factor (dB) + Reading(dBuV).
2. Correction factor (dB) = Cable loss (dB) + L.I.S.N. factor (dB).

6 Radiated Interference Measurement

6.1. Limit

According to §15.209(a), except as provided elsewhere in this subpart, the emissions from an intentional radiator shall not exceed the field strength levels specified in the following table:

Frequency (MHz)	Field Strength (μV/m at meter)	Measurement Distance (meters)
0.009 – 0.490	2400 / F (kHz)	300
0.490 – 1.705	24000 / F (kHz)	30
1.705 – 30.0	30	30
30 - 88	100**	3
88-216	150**	3
216-960	200**	3
Above 960	500	3

** Except as provided in paragraph (g), fundamental emissions from intentional radiators operating under this Section shall not be located in the frequency bands 54-72 MHz, 76-88 MHz, 174-216 MHz or 470-806 MHz. However, operation within these frequency bands is permitted under other sections of this Part, e.g., Sections 15.231 and 15.241.

6.2. Test Instruments

3 Meter Chamber (966-A)					
Equipment	Manufacturer	Model Number	Serial Number	Cal. Date	Remark
RF Pre-selector	Agilent	N9039A	MY46520256	01/08/2016	(1)
Spectrum Analyzer	Agilent	E4446A	MY46180578	01/08/2016	(1)
Pre Amplifier	Agilent	8449B	3008A02237	02/24/2015	(1)
Pre Amplifier	Agilent	8447D	2944A10961	02/24/2015	(1)
Broadband Antenna (30MHz~1GHz)	SCHWARZBECK MESS-ELEKTRONIK	VULB9163	9163-270	08/11/2015	(1)
Horn Antenna (1~18GHz)	SCHWARZBECK MESS-ELEKTRONIK	BBHA9120D	9120D-550	06/12/2015	(1)
Horn Antenna (18~40GHz)	SCHWARZBECK MESS-ELEKTRONIK	BBHA9170	9170-320	07/06/2015	(1)
Loop Antenna	COM-POWER CORPORATION	AL-130	121014	02/01/2016	(1)
Microwave Cable	EMCI	EMC-104-SM-SM-14000	140202	02/24/2015	(1)
Microwave Cable	EMCI	EMC104-SM-SM-600	140301	02/24/2015	(1)
Test Site	ATL	TE01	888001	08/27/2015	(1)

Remark: (1) Calibration period 1 year.

NOTE: N.C.R. = No Calibration Request.

6.3. Setup

9kHz ~ 30MHz

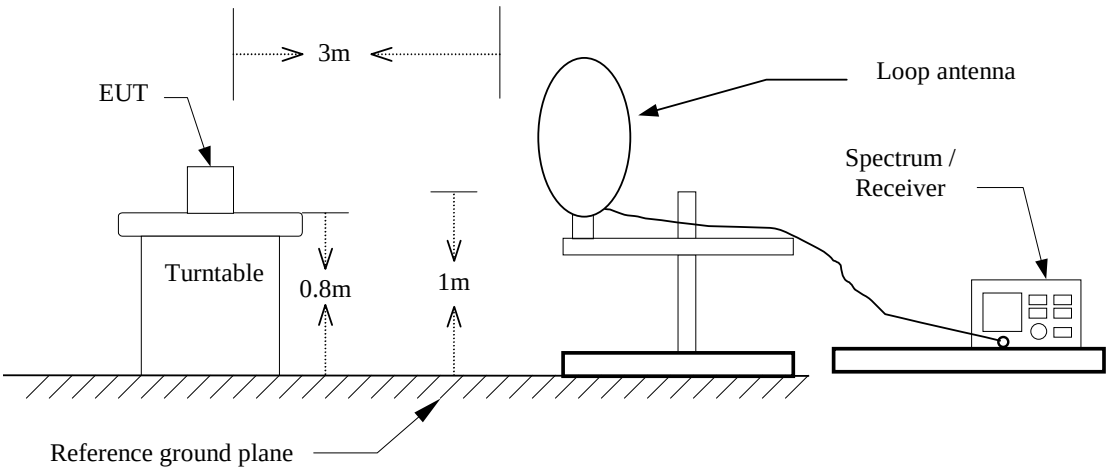

Below 1GHz

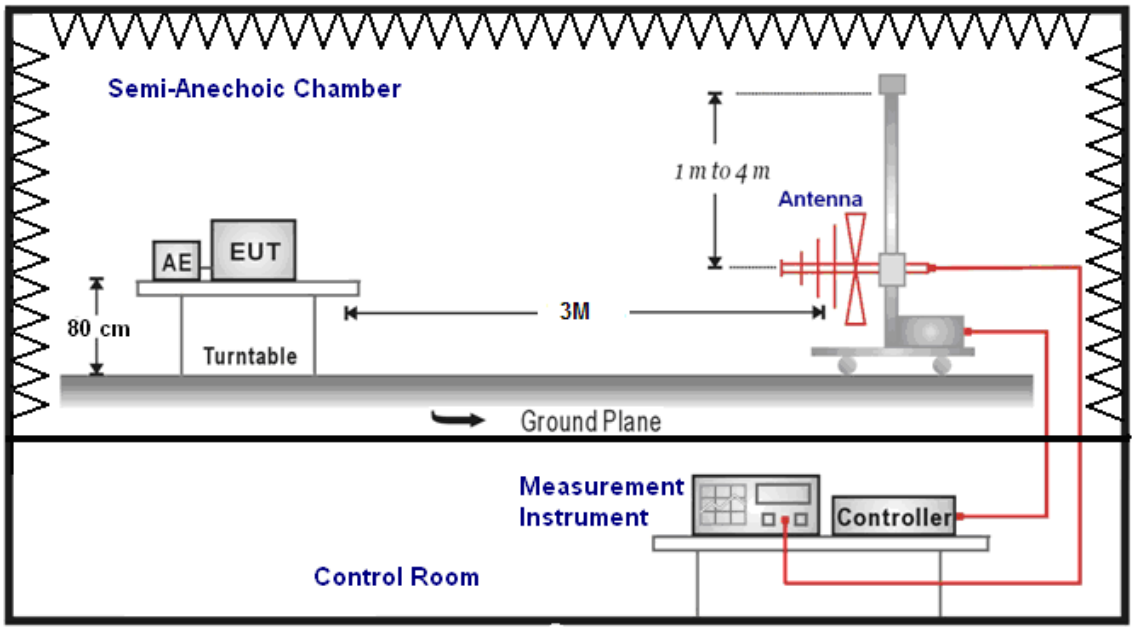

Above 1GHz

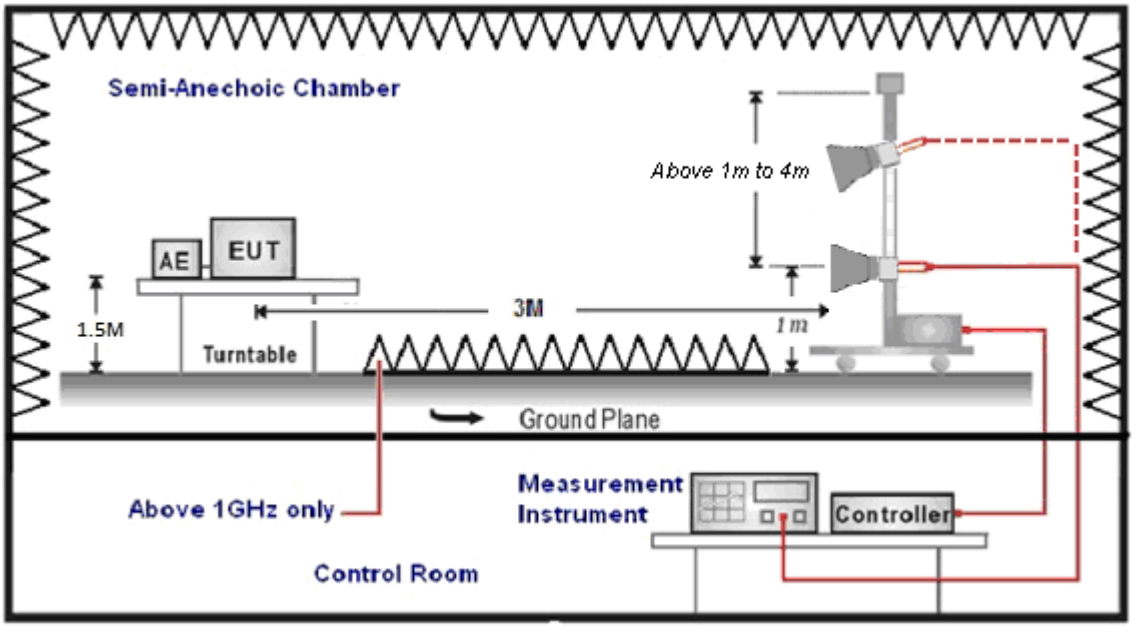
Semi-Anechoic Chamber
Above 1m to 4m
AE
EUT
1.5M
3M
1m
Turntable
Ground Plane
Above 1GHz only
Measurement
Instrument
Controller
Control Room

6.4. Test Procedure

Final radiation measurements were made on a three-meter, Semi Anechoic Chamber. The EUT system was placed on a nonconductive turntable which is 0.8 or 1.5 meters height(below 1GHz use 0.8m turntable / above 1GHz use 1.5m turntable), top surface 1.0 x 1.5 meter. The spectrum was examined from 250 MHz to 2.5 GHz in order to cover the whole spectrum below 10th harmonic which could generate from the EUT. During the test, EUT was set to transmit continuously & Measurements spectrum range from 9 kHz to 26.5 GHz is investigated.

For measurements below 1 GHz the resolution bandwidth is set to 100 kHz for peak detection measurements or 120 kHz for quasi-peak detection measurements. Peak detection is used unless otherwise noted as quasi-peak.

For measurements above 1 GHz the resolution bandwidth is set to 1 MHz, and then the video bandwidth is set to 1 MHz for peak measurements and 10 Hz for average measurements.

A nonconductive material surrounded the EUT to supporting the EUT for standing on tree orthogonal planes. At each condition, the EUT was rotated 360 degrees, and the antenna was raised and lowered from one to four meters to find the maximum emission levels. Measurements were taken using both horizontal and vertical antenna polarization.

SCHWARZBECK MESS-ELEKTRONIK Biconilog Antenna (mode VULB9163) at 3 Meter and the SCHWARZBECK Double Ridged Guide Antenna (model BBHA9120D&9170) was used in frequencies 1 – 26.5 GHz at a distance of 1 meter. All test results were extrapolated to equivalent signal at 3 meters utilizing an inverse linear distance extrapolation Factor (20dB/decade).

For testing above 1GHz, the emission level of the EUT in peak mode was 20dB lower than average limit (that means the emission level in peak mode also complies with the limit in average mode), then testing will be stopped and peak values of EUT will be reported, otherwise, the emissions will be measured in average mode again and reported.

Appropriate preamplifiers were used for improving sensitivity and precautions were taken to avoid overloading or desensitizing the spectrum analyzer. No post – detector video filters were used in the test.

The spectrum analyzer's 6 dB bandwidth was set to 1 MHz, and the analyzer was operated in the peak detection mode, for frequencies both below and up 1 GHz. The average levels were obtained by subtracting the duty cycle correction factor from the peak readings.

The following procedures were used to convert the emission levels measured in decibels referenced to 1 microvolt (dBuV) into field intensity in micro volts pre meter (uV/m).

The actual field intensity in decibels referenced to 1 microvolt in to field intensity in micro colts per meter (dBuV/m).

The actual field is intensity in referenced to 1 microvolt per meter (dBuV/m) is determined by algebraically adding the measured reading in dBuV, the antenna factor (dB), and cable loss (dB) and Subtracting the gain of preamplifier (dB) is auto calculate in spectrum analyzer.

(1) Amplitude (dBuV/m) = FI (dBuV) +AF (dBuV) +CL (dBuV)-Gain (dB)
    FI= Reading of the field intensity.
    AF= Antenna factor.
    CL= Cable loss.
    P.S Amplitude is auto calculate in spectrum analyzer.

(2) Actual Amplitude (dBuV/m) = Amplitude (dBuV)-Dis(dB)
    The FCC specified emission limits were calculated according the EUT operating frequency and by following linear interpolation equations:
    (a) For fundamental frequency : Transmitter Output < +30dBm
    (b) For spurious frequency : Spurious emission limits = fundamental emission limit /10

Data of measurement within this frequency range without mark in the table above means the reading of emissions are attenuated more than 20dB below the permissible limits or the field strength is too small to be measured.

6.5. Test Result

Below 1GHz

Standard:	FCC Part 15C	Test Distance:	3m
Test item:	Radiated Emission	Power:	AC 120V/60Hz
Model Number:	CLIP2 FF	Temp.(℃)/Hum.(%RH):	26(℃)/60%RH
Mode:	1	Date:	02/22/2016
		Test By:	Eric Ou Yang

Frequency (MHz)	Reading (dBuV)	Correct Factor (dB/m)	Result (dBuV/m)	Limit (dBuV/m)	Margin (dB)	Remark	Ant.Polar. H / V
72.0000	48.64	-18.25	30.39	40.00	-9.61	QP	H
180.0000	47.03	-17.16	29.87	43.50	-13.63	QP	H
259.0000	48.27	-16.47	31.80	46.00	-14.20	QP	H
323.5000	45.12	-14.40	30.72	46.00	-15.28	QP	H
465.0000	37.54	-10.88	26.66	46.00	-19.34	QP	H
583.0000	34.88	-8.49	26.39	46.00	-19.61	QP	H
180.0000	44.06	-17.16	26.90	43.50	-16.60	QP	V
258.5000	48.55	-16.48	32.07	46.00	-13.93	QP	V
399.0000	43.67	-12.40	31.27	46.00	-14.73	QP	V
490.0000	38.45	-10.41	28.04	46.00	-17.96	QP	V
798.0000	29.13	-5.36	23.77	46.00	-22.23	QP	V
947.0000	27.77	-3.26	24.51	46.00	-21.49	QP	V

Note: No emission found between lowest internal used/generated frequencies to 30MHz (9 kHz~30MHz).

Above 1GHz

Standard:	FCC Part 15C	Test Distance:	3m
Test item:	Radiated Emission	Power:	AC 120V/60Hz
Model Number:	CLIP2 FF	Temp.(℃)/Hum.(%RH):	26(℃)/60%RH
Mode:	2	Date:	02/22/2016
Frequency:	2402 MHz	Test By:	Eric Ou Yang

Frequency (MHz)	Reading (dBuV)	Correct Factor (dB/m)	Result (dBuV/m)	Limit (dBuV/m)	Margin (dB)	Remark	Ant.Polar. H / V
3058.000	35.80	7.22	43.02	74.00	-30.98	peak	H
4804.000	36.62	10.68	47.30	74.00	-26.70	peak	H
7206.000	37.60	15.42	53.02	74.00	-20.98	peak	H
7206.000	30.94	15.42	46.36	54.00	-7.64	AVG	H
3058.000	35.99	7.22	43.21	74.00	-30.79	peak	V
4804.000	40.65	10.68	51.33	74.00	-22.67	peak	V
7206.000	38.62	15.42	54.04	74.00	-19.96	peak	V
7206.000	31.55	15.42	46.97	54.00	-7.03	AVG	V

Standard:	FCC Part 15C	Test Distance:	3m
Test item:	Radiated Emission	Power:	AC 120V/60Hz
Model Number:	CLIP2 FF	Temp.(℃)/Hum.(%RH):	26(℃)/60%RH
Mode:	2	Date:	02/22/2016
Frequency:	2441 MHz	Test By:	Eric Ou Yang

Frequency (MHz)	Reading (dBuV)	Correct Factor (dB/m)	Result (dBuV/m)	Limit (dBuV/m)	Margin (dB)	Remark	Ant.Polar. H / V
3107.000	35.72	7.26	42.98	74.00	-31.02	peak	H
4731.000	33.26	10.55	43.81	74.00	-30.19	peak	H
7323.000	40.75	15.53	56.28	74.00	-17.72	peak	H
7323.000	33.98	15.53	49.51	54.00	-4.49	AVG	H
3065.000	35.37	7.22	42.59	74.00	-31.41	peak	V
4640.000	33.81	10.39	44.20	74.00	-29.80	peak	V
7323.000	43.24	15.53	58.77	74.00	-15.23	peak	V
7323.000	36.05	15.53	51.58	54.00	-2.42	AVG	V

Standard:	FCC Part 15C	Test Distance:	3m
Test item:	Radiated Emission	Power:	AC 120V/60Hz
Model Number:	CLIP2 FF	Temp.(℃)/Hum.(%RH):	26(℃)/60%RH
Mode:	2	Date:	02/22/2016
Frequency:	2480 MHz	Test By:	Eric Ou Yang

Frequency (MHz)	Reading (dBuV)	Correct Factor (dB/m)	Result (dBuV/m)	Limit (dBuV/m)	Margin (dB)	Remark	Ant.Polar. H / V
3114.000	35.60	7.27	42.87	74.00	-31.13	peak	H
4960.000	35.13	10.93	46.06	74.00	-27.94	peak	H
7440.000	39.45	15.67	55.12	74.00	-18.88	peak	H
7440.000	31.38	15.67	47.05	54.00	-6.95	AVG	H
3317.000	35.96	7.43	43.39	74.00	-30.61	peak	V
4960.000	35.75	10.93	46.68	74.00	-27.32	peak	V
7440.000	43.41	15.67	59.08	74.00	-14.92	peak	V
7440.000	37.43	15.67	53.10	54.00	-0.90	AVG	V

Standard:	FCC Part 15C	Test Distance:	3m
Test item:	Radiated Emission	Power:	AC 120V/60Hz
Model Number:	CLIP2 FF	Temp.(℃)/Hum.(%RH):	26(℃)/60%RH
Mode:	4	Date:	02/22/2016
Frequency:	2402 MHz	Test By:	Eric Ou Yang

Frequency (MHz)	Reading (dBuV)	Correct Factor (dB/m)	Result (dBuV/m)	Limit (dBuV/m)	Margin (dB)	Remark	Ant.Polar. H / V
3184.000	35.04	7.33	42.37	74.00	-31.63	peak	H
4612.000	34.71	10.34	45.05	74.00	-28.95	peak	H
6670.000	32.54	14.84	47.38	74.00	-26.62	peak	H
3079.000	35.63	7.23	42.86	74.00	-31.14	peak	V
4486.000	33.72	10.11	43.83	74.00	-30.17	peak	V
6635.000	32.72	14.81	47.53	74.00	-26.47	peak	V

Standard:	FCC Part 15C	Test Distance:	3m
Test item:	Radiated Emission	Power:	AC 120V/60Hz
Model Number:	CLIP2 FF	Temp.(℃)/Hum.(%RH):	26(℃)/60%RH
Mode:	4	Date:	02/22/2016
Frequency:	2441 MHz	Test By:	Eric Ou Yang

Frequency (MHz)	Reading (dBuV)	Correct Factor (dB/m)	Result (dBuV/m)	Limit (dBuV/m)	Margin (dB)	Remark	Ant.Polar. H / V
3142.000	34.39	7.28	41.67	74.00	-32.33	peak	H
4654.000	34.01	10.41	44.42	74.00	-29.58	peak	H
6782.000	32.93	14.97	47.90	74.00	-26.10	peak	H
3058.000	34.96	7.22	42.18	74.00	-31.82	peak	V
4647.000	33.82	10.41	44.23	74.00	-29.77	peak	V
6768.000	31.98	14.94	46.92	74.00	-27.08	peak	V

Standard:	FCC Part 15C	Test Distance:	3m
Test item:	Radiated Emission	Power:	AC 120V/60Hz
Model Number:	CLIP2 FF	Temp.(℃)/Hum.(%RH):	26(℃)/60%RH
Mode:	4	Date:	02/22/2016
Frequency:	2480 MHz	Test By:	Eric Ou Yang

Frequency (MHz)	Reading (dBuV)	Correct Factor (dB/m)	Result (dBuV/m)	Limit (dBuV/m)	Margin (dB)	Remark	Ant.Polar. H / V
3023.000	35.83	7.19	43.02	74.00	-30.98	peak	H
4647.000	33.73	10.41	44.14	74.00	-29.86	peak	H
6747.000	32.00	14.93	46.93	74.00	-27.07	peak	H
3128.000	35.00	7.27	42.27	74.00	-31.73	peak	V
4570.000	34.45	10.28	44.73	74.00	-29.27	peak	V
6698.000	31.67	14.88	46.55	74.00	-27.45	peak	V

Band Edge

Standard:	FCC Part 15C	Test Distance:	3m
Test item:	Radiated Emission	Power:	AC 120V/60Hz
Model Number:	CLIP2 FF	Temp.(℃)/Hum.(%RH):	26(℃)/60%RH
Mode:	2	Date:	02/22/2016
Frequency:	2402 MHz	Test By:	Eric Ou Yang

Frequency (MHz)	Reading (dBuV)	Correct Factor (dB/m)	Result (dBuV/m)	Limit (dBuV/m)	Margin (dB)	Remark	Ant.Polar. H / V
2349.710	41.51	5.34	46.85	74.00	-27.15	peak	H
2390.000	39.78	5.45	45.23	74.00	-28.77	peak	H
2343.770	43.96	5.34	49.30	74.00	-24.70	peak	V
2390.000	40.53	5.45	45.98	74.00	-28.02	peak	V

Standard:	FCC Part 15C	Test Distance:	3m
Test item:	Radiated Emission	Power:	AC 120V/60Hz
Model Number:	CLIP2 FF	Temp.(℃)/Hum.(%RH):	26(℃)/60%RH
Mode:	2	Date:	02/22/2016
Frequency:	2480 MHz	Test By:	Eric Ou Yang

Frequency (MHz)	Reading (dBuV)	Correct Factor (dB/m)	Result (dBuV/m)	Limit (dBuV/m)	Margin (dB)	Remark	Ant.Polar. H / V
2483.500	48.65	5.70	54.35	74.00	-19.65	peak	H
2483.500	38.54	5.70	44.24	54.00	-9.76	AVG	H
2483.620	47.50	5.70	53.20	74.00	-20.80	peak	H
2483.620	37.36	5.70	43.06	54.00	-10.94	AVG	H
2483.500	48.03	5.70	53.73	74.00	-20.27	peak	V
2483.500	37.40	5.70	43.10	54.00	-10.90	AVG	V
2483.680	46.72	5.70	52.42	74.00	-21.58	peak	V
2483.680	35.54	5.70	41.24	54.00	-12.76	AVG	V

Standard:	FCC Part 15C	Test Distance:	3m
Test item:	Radiated Emission	Power:	AC 120V/60Hz
Model Number:	CLIP2 FF	Temp.(℃)/Hum.(%RH):	26(℃)/60%RH
Mode:	2	Date:	02/22/2016
	Hopping	Test By:	Eric Ou Yang

Frequency (MHz)	Reading (dBuV)	Correct Factor (dB/m)	Result (dBuV/m)	Limit (dBuV/m)	Margin (dB)	Remark	Ant.Polar. H / V
2358.830	41.65	3.88	45.53	74.00	-28.47	peak	H
2390.000	39.82	3.97	43.79	74.00	-30.21	peak	H
2483.500	41.55	4.25	45.80	74.00	-28.20	peak	H
2492.970	41.67	4.28	45.95	74.00	-28.05	peak	H
2357.690	42.36	3.88	46.24	74.00	-27.76	peak	V
2390.000	40.67	3.97	44.64	74.00	-29.36	peak	V
2483.500	41.56	4.25	45.81	74.00	-28.19	peak	V
2496.390	42.36	4.28	46.64	74.00	-27.36	peak	V

Standard:	FCC Part 15C	Test Distance:	3m
Test item:	Radiated Emission	Power:	AC 120V/60Hz
Model Number:	CLIP2 FF	Temp.(℃)/Hum.(%RH):	26(℃)/60%RH
Mode:	4	Date:	02/22/2016
Frequency:	2402 MHz	Test By:	Eric Ou Yang

Frequency (MHz)	Reading (dBuV)	Correct Factor (dB/m)	Result (dBuV/m)	Limit (dBuV/m)	Margin (dB)	Remark	Ant.Polar. H / V
2342.340	42.94	5.33	48.27	74.00	-25.73	peak	H
2390.000	40.91	5.45	46.36	74.00	-27.64	peak	H
2342.670	42.17	5.33	47.50	74.00	-26.50	peak	V
2390.000	40.10	5.45	45.55	74.00	-28.45	AVG	V

Standard:	FCC Part 15C	Test Distance:	3m
Test item:	Radiated Emission	Power:	AC 120V/60Hz
Model Number:	CLIP2 FF	Temp.(℃)/Hum.(%RH):	26(℃)/60%RH
Mode:	4	Date:	02/22/2016
Frequency:	2480 MHz	Test By:	Eric Ou Yang

Frequency (MHz)	Reading (dBuV)	Correct Factor (dB/m)	Result (dBuV/m)	Limit (dBuV/m)	Margin (dB)	Remark	Ant.Polar. H / V
2483.500	50.14	5.70	55.84	74.00	-18.16	peak	H
2483.500	40.71	5.70	46.41	54.00	-7.59	AVG	H
2483.600	50.95	5.70	56.65	74.00	-17.35	peak	H
2483.600	39.49	5.70	45.19	54.00	-8.81	AVG	H
2483.500	48.64	5.70	54.34	74.00	-19.66	peak	V
2483.500	34.40	5.70	40.10	54.00	-13.90	AVG	V
2483.620	50.65	5.70	56.35	74.00	-17.65	peak	V
2483.620	33.57	5.70	39.27	54.00	-14.73	AVG	V

Standard:	FCC Part 15C	Test Distance:	3m
Test item:	Radiated Emission	Power:	AC 120V/60Hz
Model Number:	CLIP2 FF	Temp.(℃)/Hum.(%RH):	26(℃)/60%RH
Mode:	4	Date:	02/22/2016
	Hopping	Test By:	Eric Ou Yang

Frequency (MHz)	Reading (dBuV)	Correct Factor (dB/m)	Result (dBuV/m)	Limit (dBuV/m)	Margin (dB)	Remark	Ant.Polar. H / V
2322.730	41.79	3.77	45.56	74.00	-28.44	peak	H
2390.000	39.38	3.97	43.35	74.00	-30.65	peak	H
2483.500	42.88	4.25	47.13	74.00	-26.87	peak	H
2488.600	41.68	4.26	45.94	74.00	-28.06	peak	H
2387.330	40.56	3.97	44.53	74.00	-29.47	peak	V
2390.000	38.51	3.97	42.48	74.00	-31.52	peak	V
2483.500	41.71	4.25	45.96	74.00	-28.04	peak	V
2494.680	41.99	4.28	46.27	74.00	-27.73	peak	V

7 20dB RF Bandwidth Measurement

7.1. Limit

N/A

7.2. Test Setup

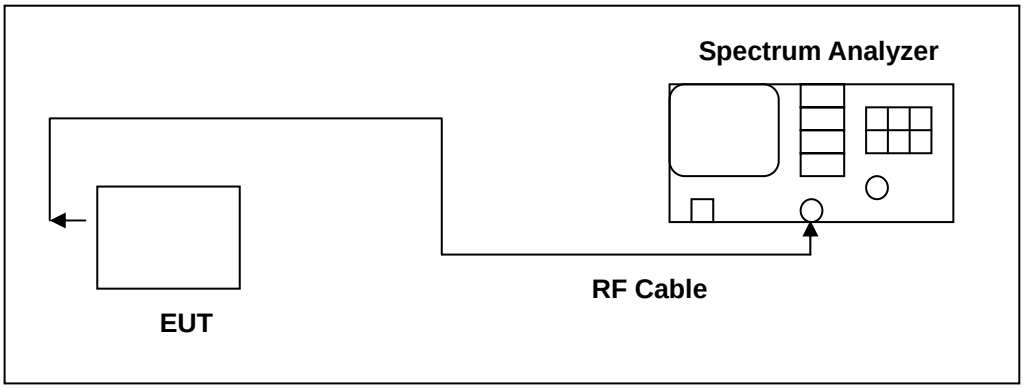

7.3. Test Instruments

Equipment	Manufacturer	Model Number	Serial Number	Cal. Date	Remark
Spectrum Analyzer	Agilent	E4445A	MY45300744	12/15/2015	(1)
Microwave Cable	EMCI	EMC104-SM-SM-1 500	140303	02/24/2015	(1)
Test Site	ATL	TE05	TE05	N.C.R.	-----

Remark: (1) Calibration period 1 year.
NOTE: N.C.R. = No Calibration Request.

7.4. Test Procedure

20dB RF Bandwidth

Testing must be done according to this procedure, FCC Public Notice DA 00-705 - Filing and Measurement Guidelines for Frequency Hopping Spread Spectrum Systems. This is the only method recognized by the FCC. The RF output port of the Equipment-Under-Test is directly coupled to the input of the EMC analyzer through a specialized RF connector and a 10dB passive attenuator. A fully charged battery was used for the supply voltage. The Bluetooth frequency hopping function of the EUT was enabled. The spectrum analyzer used the following settings:

1. Span = approx. 2 to 3 times the 20dB bandwidth, centered on a hopping frequency
2. RBW ≥ 1% of the 20dB span
3. VBW ≥ RBW
4. Sweep = auto
5. Detector function = peak
6. Trace = max hold

The trace was allowed to stabilize. The EUT was transmitting at its maximum data rate. The marker-to-peak function was used to set the marker to the peak of the emission. The marker-delta function was used to measure 20dB down one side of the emission. The marker-delta function and marker was moved to the other side of the emission until it was even with the reference marker. The marker-delta reading at this point was the 20dB bandwidth of the emission.

Remark: Peak detector is used.

7.5. Test Result

Model Number	CLIP2 FF			
Test Item	20dB RF Bandwidth and 99 % Occupied Bandwidth			
Test Mode	Mode 2 / Mode 4			
Date of Test	02/05/2016		Test Site	TE05
Test Mode	Frequency (MHz)	20dB RF Bandwidth (MHz)		Limit (MHz)
Mode 2	2402	0.950		-----
	2441	0.951		-----
	2480	0.951		-----
Mode 4	2402	1.256		-----
	2441	1.256		-----
	2480	1.256		-----

7.6. Test Graphs

Mode 2: GFSK TX Mode	
2402 MHz	
2441 MHz	
2480 MHz	

Mode 4: 8DPSK TX Mode	
2402 MHz	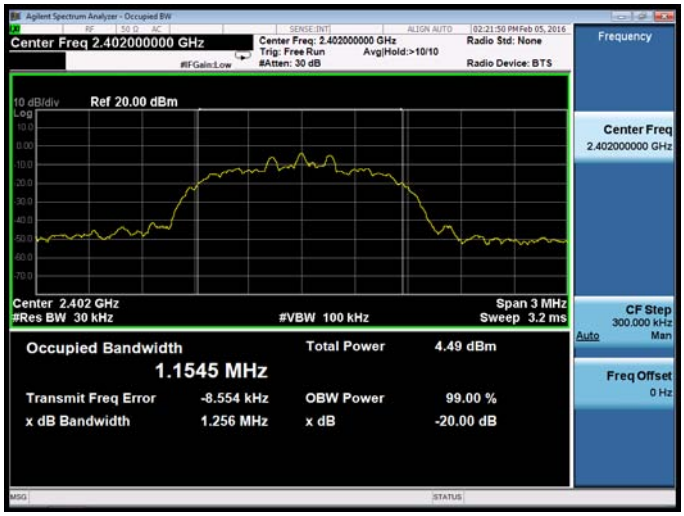
2441 MHz	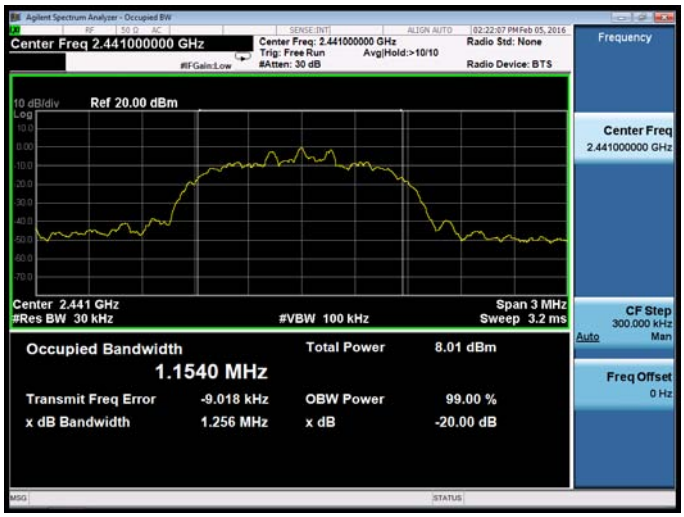
2480 MHz	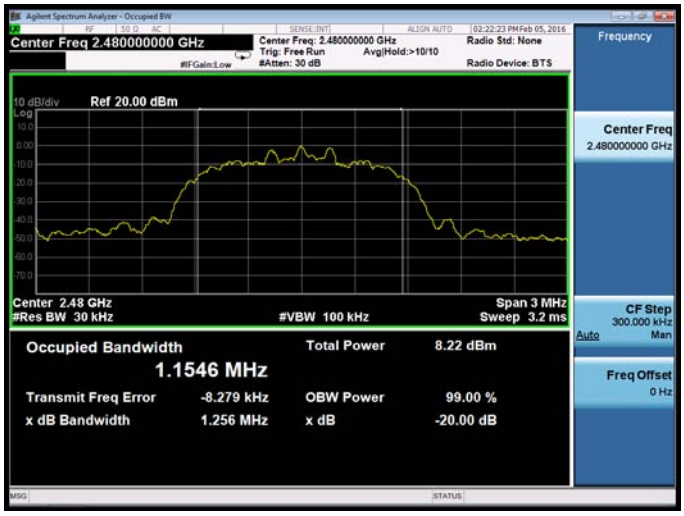

8 Carrier Frequency Separation Measurement

8.1. Limit

Title 47 of the CFR, Part 15 Subpart (c) 15.247(a)(1) requires the measurement of the bandwidth of the transmission between the -20 dB points on the transmitted spectrum. The results of this test determine the limits for channel spacing. The channel spacing shall be a minimum of 25 kHz or the 20 dB bandwidth, whichever is greater. Alternatively, frequency hopping systems operating in the 2400-2483.5 MHz band may have hopping channel carrier frequencies that are separated by 25 kHz or two-thirds of the 20 dB bandwidth of the hopping channel.

8.2. Test Setup

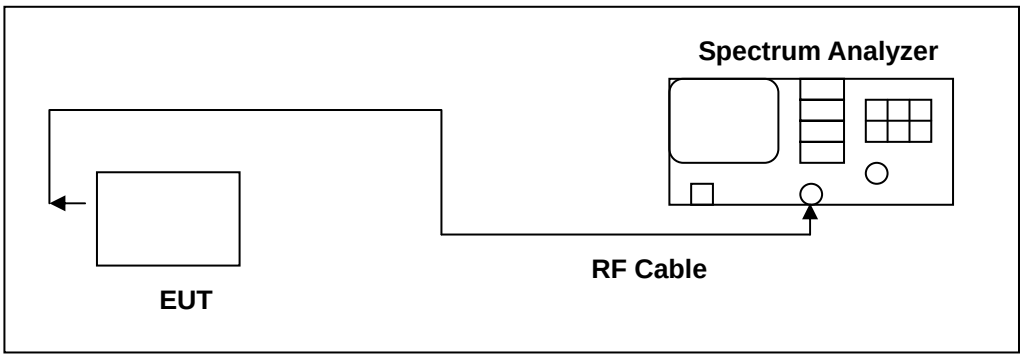

8.3. Test Instruments

Equipment	Manufacturer	Model Number	Serial Number	Cal. Date	Remark
Spectrum Analyzer	Agilent	E4445A	MY45300744	12/15/2015	(1)
Microwave Cable	EMCI	EMC104-SM-SM-1 500	140303	02/24/2015	(1)
Test Site	ATL	TE05	TE05	N.C.R.	-----

Remark: (1) Calibration period 1 year.
NOTE: N.C.R. = No Calibration Request.

8.4. Test Procedure

Testing must be done according to this procedure, FCC Public Notice DA 00-705 - Filing and Measurement Guidelines for Frequency Hopping Spread Spectrum Systems. This is the only method recognized by the FCC. The RF output port of the Equipment-Under-Test is directly coupled to the input of the EMC analyzer through a specialized RF connector and a 10dB passive attenuator. A fully charged battery was used for the supply voltage. The Bluetooth frequency hopping function of the EUT was enabled. The following spectrum analyzer settings were used:

1. Span = wide enough to capture the peaks of two adjacent channels
2. Resolution (or IF) Bandwidth (RBW) ≥ 1% of the span
3. Video (or Average) Bandwidth (VBW) ≥ RBW
4. Sweep = auto
5. Detector function = peak
6. Trace = max hold

The trace was allowed to stabilize. The marker-delta function was used to determine the separation between the peaks of the adjacent channels.

Remark： Peak detector is used.

8.5. Test Result

Model Number	CLIP2 FF		
Test Item	Carrier Frequency Separation		
Test Mode	Mode 2 / Mode 4		
Date of Test	02/22/2016	Test Site	TE05

Test Mode	Frequency (MHz)	Measurement (MHz)	Limit (MHz)
Mode 2	2402	1.000	> 0.633
	2441	1.000	> 0.634
	2480	1.000	> 0.634
Mode 4	2402	1.000	> 0.837
	2441	1.000	> 0.837
	2480	1.000	> 0.837

8.6. Test Graphs

Mode 2: GFSK TX Mode	
2402 MHz	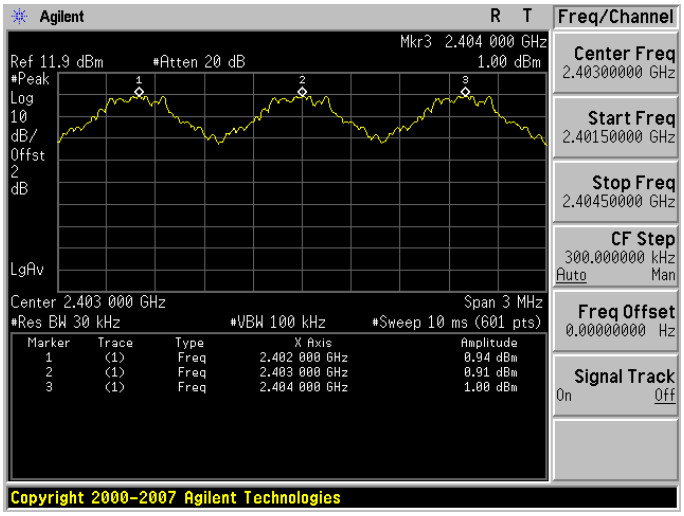
2441 MHz	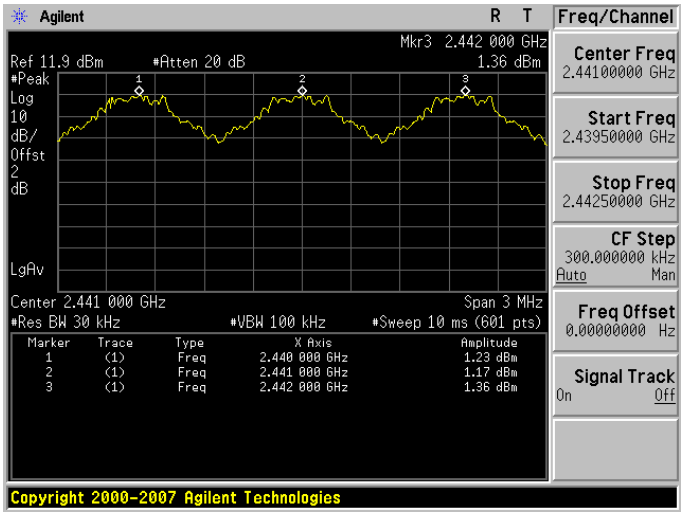
2480 MHz	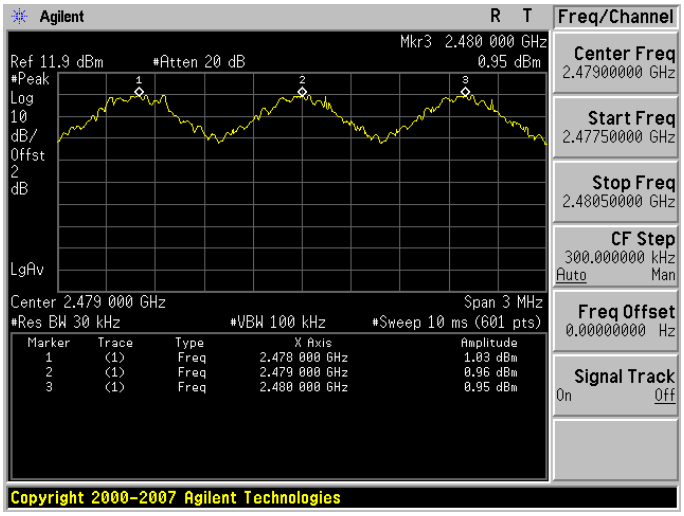

Mode 4: 8DPSK Link Mode	
2402 MHz	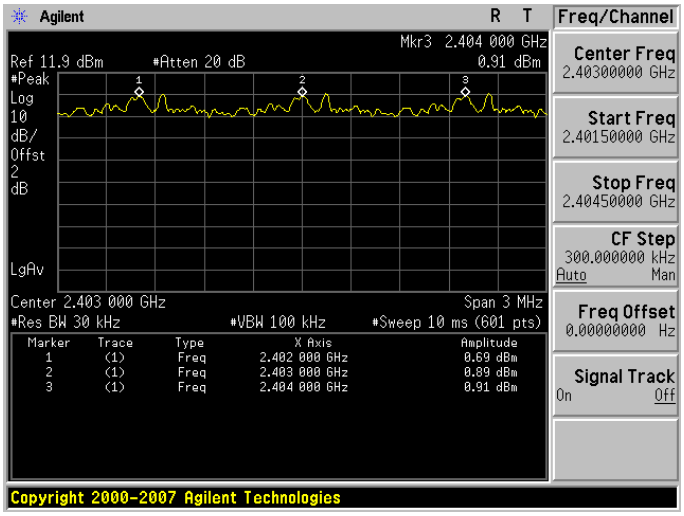
2441 MHz	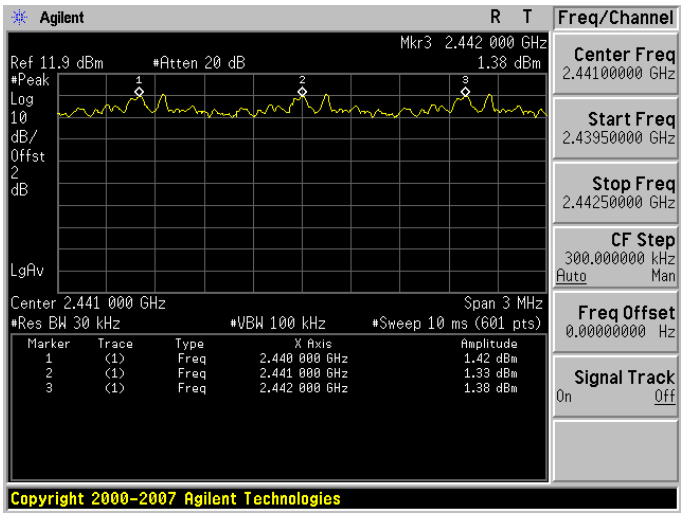
2480 MHz	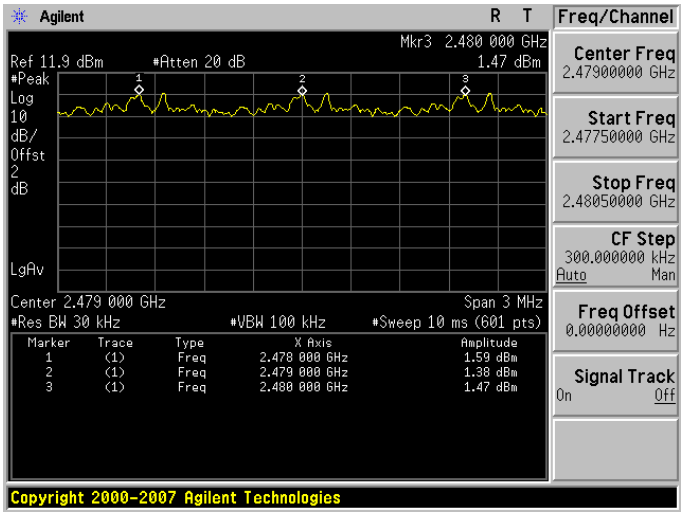

9 Number of Hopping Measurement

9.1. Limit

Frequency hopping systems in the 2400–2483.5 MHz band shall use at least 15 channels.

9.2. Test Setup

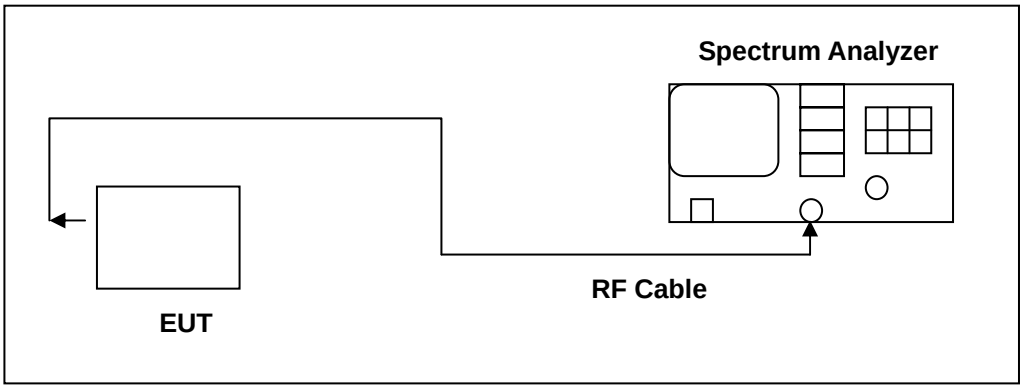

9.3. Test Instruments

Equipment	Manufacturer	Model Number	Serial Number	Cal. Date	Remark
Spectrum Analyzer	Agilent	E4445A	MY45300744	12/15/2015	(1)
Microwave Cable	EMCI	EMC104-SM-SM-1500	140303	02/24/2015	(1)
Test Site	ATL	TE05	TE05	N.C.R.	-----

Remark: (1) Calibration period 1 year.
NOTE: N.C.R. = No Calibration Request.

9.4. Test Procedure

Testing must be done according to this procedure, FCC Public Notice DA 00-705 - Filing and Measurement Guidelines for Frequency Hopping Spread Spectrum Systems. This is the only method recognized by the FCC. The RF output port of the Equipment-Under-Test is directly coupled to the input of the EMC analyzer through a specialized RF connector and a 10dB passive attenuator. A fully charged battery was used for the supply voltage. The Bluetooth frequency hopping function of the EUT was enabled. The spectrum analyzer used the following settings:

1. Span = the frequency band of operation
2. RBW ≥ 1% of the span
3. VBW ≥ RBW
4. Sweep = auto
5. Detector function = peak
6. Trace = max hold

The trace was allowed to stabilize.

9.5. Test Result

Model Number	CLIP2 FF			
Test Item	Number of Hopping			
Test Mode	Mode 2 / Mode 4			
Date of Test	02/05/2016		Test Site	TE05
Test Mode	Frequency Range (MHz)	Measurement (ch)	Limit (ch)	
Mode 2	2402 - 2480	79	> 15	
Mode 4	2402 - 2480	79	> 15	

9.6. Test Graphs

Mode 2: GFSK TX Mode	
CH0~CH39	
CH40~CH78	

Mode 4: 8DPSK TX Mode	
CH0~CH39	
CH40~CH78	

10 Time of Occupancy (Dwell Time) Measurement

10.1. Limit

The average time of occupancy on any channel shall not be greater than 0.4 seconds within a period of 0.4 seconds multiplied by the number of hopping channels employed.

10.2. Test Setup

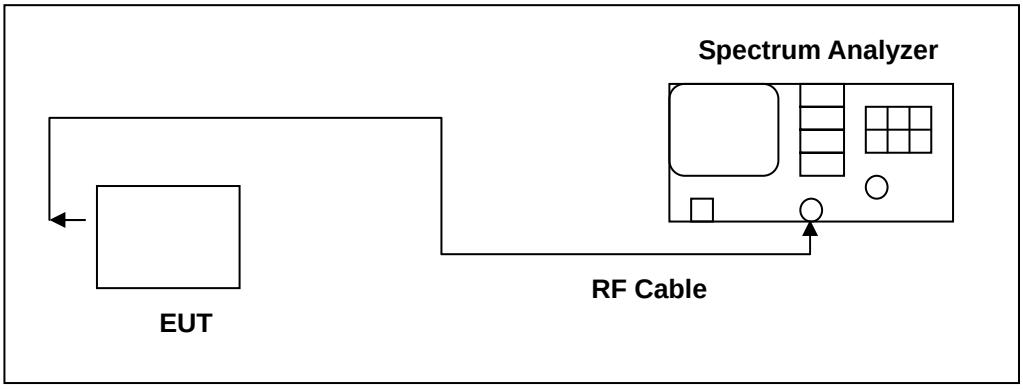

10.3. Test Instruments

Equipment	Manufacturer	Model Number	Serial Number	Cal. Date	Remark
Spectrum Analyzer	Agilent	E4445A	MY45300744	12/15/2015	(1)
Microwave Cable	EMCI	EMC104-SM-SM-1500	140303	02/24/2015	(1)
Test Site	ATL	TE05	TE05	N.C.R.	-----

Remark: (1) Calibration period 1 year.
NOTE: N.C.R. = No Calibration Request.

10.4. Test Procedure

Testing must be done according to this procedure, FCC Public Notice DA 00-705 - Filing and Measurement Guidelines for Frequency Hopping Spread Spectrum Systems. This is the only method recognized by the FCC. The RF output port of the Equipment-Under-Test is directly coupled to the input of the spectrum through a specialized RF connector and a 10dB passive attenuator. A fully charged battery was used for the supply voltage. The Bluetooth hopping function of the EUT was enabled. The following spectrum analyzer settings were used:

1. Span = zero span, centered on a hopping channel
2. RBW = 1 MHz
3. VBW ≥ RBW
4. Sweep = as necessary to capture the entire dwell time per hopping channel
5. Detector function = peak
6. Trace = max hold

The marker-delta function was used to determine the dwell time.

10.5. Test Result

Model Number	CLIP2 FF		
Test Item	Time of Occupancy (Dwell Time)		
Test Mode	Mode 2: GFSK TX Mode		
Date of Test	02/05/2016	Test Site	TE05
DH1			
Cycle Calculate	79CH * 0.4 = 31.6 (sec)		
The EUT Hopping Number per Sec	1600 times/sec		
Each Channel Dwell Times per Sec	800/79CH = 10.13(times/sec)		
Each Channel Dwell Times on Cycle(1)	31.6 * 10.13 = 320.108(times)		
Each Channel Dwell Times (2)	0.440 ms (sec)		
Dwell Times on Cycle (1) * (2)	140.848 ms (sec)		
LIMIT(msec)	< = 400		
DH3			
Cycle Calculate	79CH * 0.4 = 31.6 (sec)		
The EUT Hopping Number per Sec	1600 times/sec		
Each Channel Dwell Times per Sec	400/79CH = 5.1(times/sec)		
Each Channel Dwell Times on Cycle(1)	31.6 * 5.1 = 161.16(times)		
Each Channel Dwell Times (2)	1.690 ms (sec)		
Dwell Times on Cycle (1) * (2)	270.224 ms (sec)		
LIMIT(msec)	< = 400		
DH5			
Cycle Calculate	79CH * 0.4 = 31.6 (sec)		
The EUT Hopping Number per Sec	1600 times/sec		
Each Channel Dwell Times per Sec	266.7/79CH = 3.37(times/sec)		
Each Channel Dwell Times on Cycle(1)	31.6 * 3.37 = 106.492(times)		
Each Channel Dwell Times (2)	2.940 ms (sec)		
Dwell Times on Cycle (1) * (2)	314.016 ms (sec)		
LIMIT(msec)	< = 400		

Model Number	CLIP2 FF		
Test Item	Time of Occupancy (Dwell Time)		
Test Mode	Mode 4: 8DPSK TX Mode		
Date of Test	02/05/2016	Test Site	TE05
3DH1			
Cycle Calculate	79CH * 0.4 = 31.6 (sec)		
The EUT Hopping Number per Sec	1600 times/sec		
Each Channel Dwell Times per Sec	800/79CH = 10.13(times/sec)		
Each Channel Dwell Times on Cycle(1)	31.6 * 10.13 = 320.108(times)		
Each Channel Dwell Times (2)	0.440 ms (sec)		
Dwell Times on Cycle (1) * (2)	140.848 ms (sec)		
LIMIT(msec)	< = 400		
3DH3			
Cycle Calculate	79CH * 0.4 = 31.6 (sec)		
The EUT Hopping Number per Sec	1600 times/sec		
Each Channel Dwell Times per Sec	400/79CH = 5.1(times/sec)		
Each Channel Dwell Times on Cycle(1)	31.6 * 5.1 = 161.16(times)		
Each Channel Dwell Times (2)	1.690 ms (sec)		
Dwell Times on Cycle (1) * (2)	270.224 ms (sec)		
LIMIT(msec)	< = 400		
3DH5			
Cycle Calculate	79CH * 0.4 = 31.6 (sec)		
The EUT Hopping Number per Sec	1600 times/sec		
Each Channel Dwell Times per Sec	266.7/79CH = 3.37(times/sec)		
Each Channel Dwell Times on Cycle(1)	31.6 * 3.37 = 106.492(times)		
Each Channel Dwell Times (2)	2.940 ms (sec)		
Dwell Times on Cycle (1) * (2)	314.016 ms (sec)		
LIMIT(msec)	< = 400		

10.6. Test Graphs

Mode 2: GFSK TX Mode	
DH1	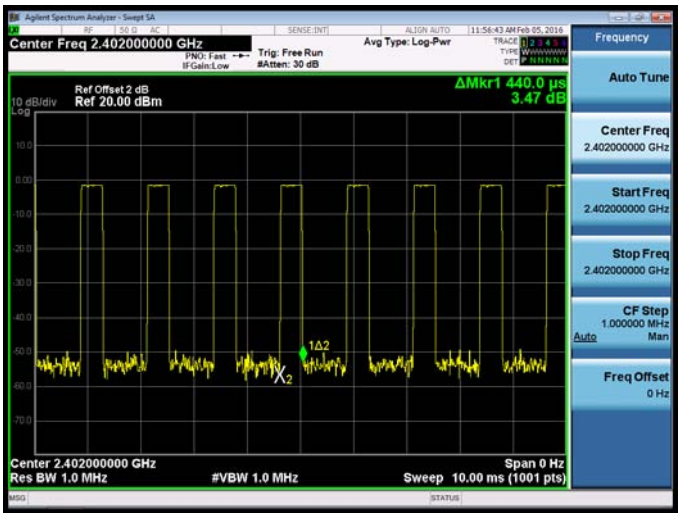
DH3	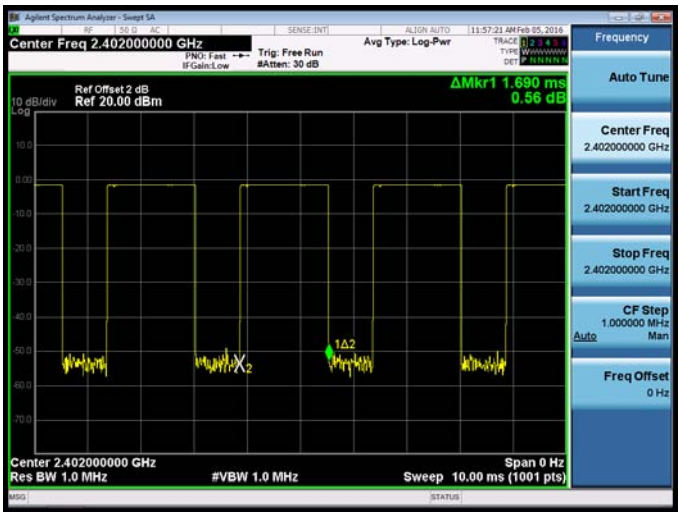
DH5	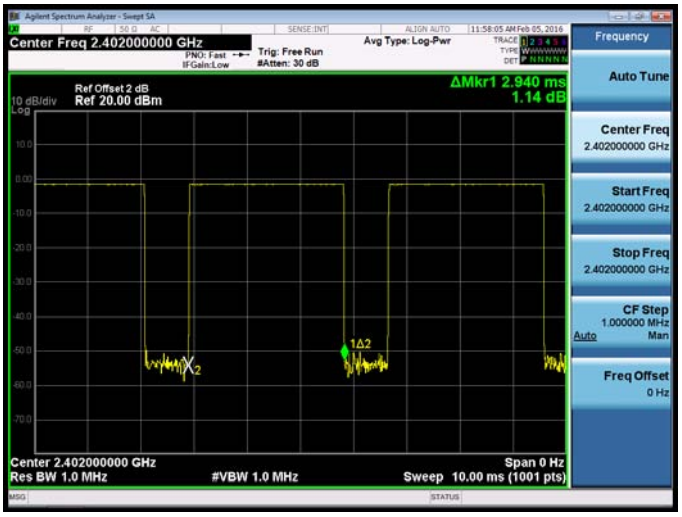

Mode 4: 8DPSK TX Mode	
3DH1	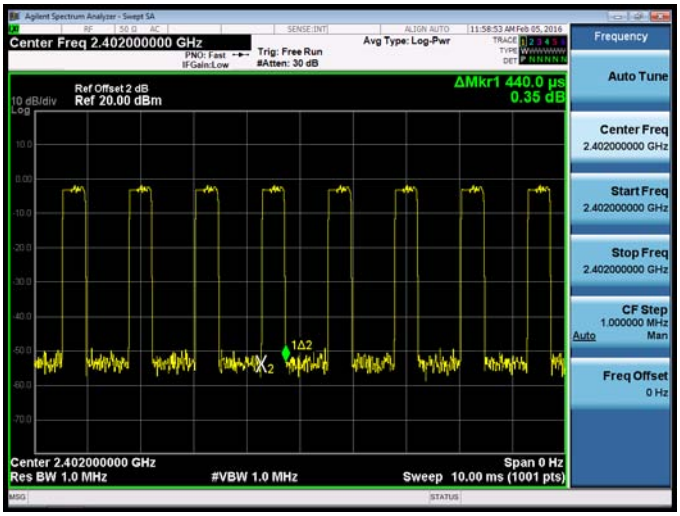
3DH3	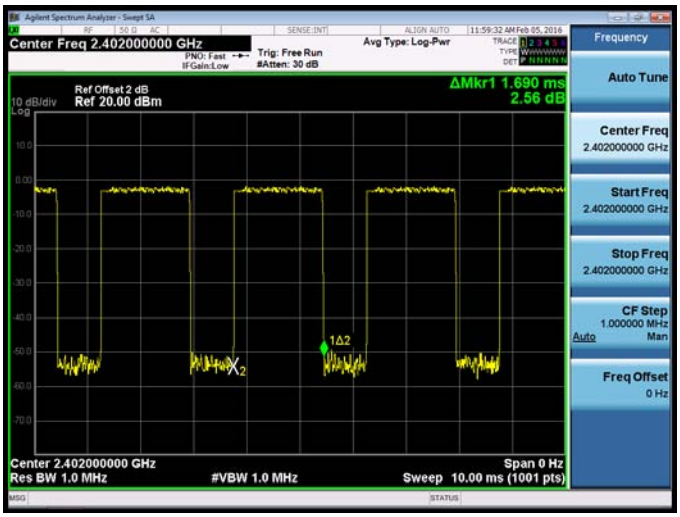
3DH5	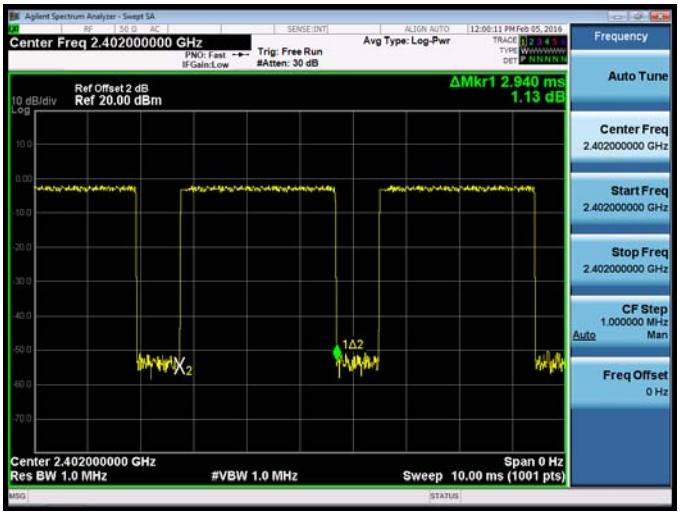

11 Out of Band Conducted Emissions Measurement

11.1. Limit

In any 100 kHz bandwidth outside the frequency band in which the spread spectrum or digitally modulated intentional radiator is operating, the radio frequency power that is produced by the intentional radiator shall be at least 20 dB below that in the 100 kHz bandwidth within the band that contains the highest level of the desired power

11.2. Test Setup

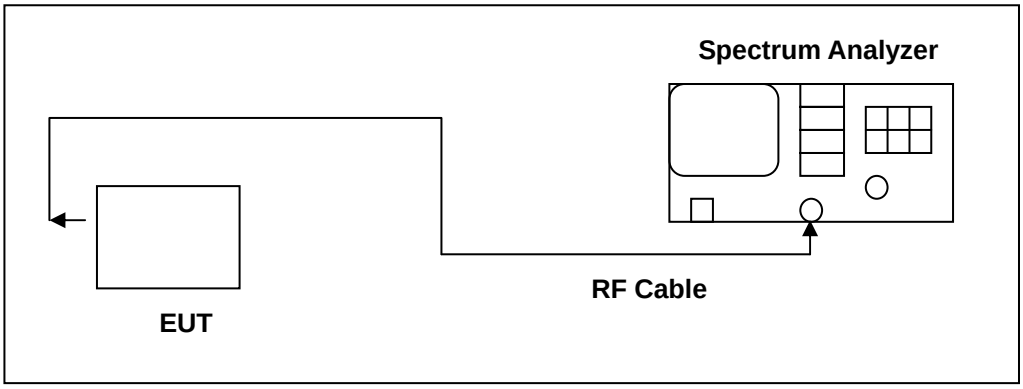

11.3. Test Instruments

Equipment	Manufacturer	Model Number	Serial Number	Cal. Date	Remark
Spectrum Analyzer	Agilent	E4445A	MY45300744	12/15/2015	(1)
Spectrum Analyzer	Agilent	E4408B	MY45107753	07/27/2015	(1)
Microwave Cable	EMCI	EMC104-SM-SM-1500	140303	02/24/2015	(1)
Test Site	ATL	TE05	TE05	N.C.R.	-----

Remark: (1) Calibration period 1 year.
NOTE: N.C.R. = No Calibration Request.

11.4. Test Procedure

Testing must be done according to this procedure, FCC Public Notice DA 00-705 - Filing and Measurement Guidelines for Frequency Hopping Spread Spectrum Systems. This is the only method recognized by the FCC. In any 100 kHz bandwidth outside the EUT pass band, the RF power produced by the modulation products of the spreading sequence, the information sequence, and the carrier frequency shall be at least 20 dB below that of the maximum in-band 100 kHz emission, antenna output of the EUT was coupled directly to spectrum analyzer; if an external attenuator and/or cable was used, these losses are compensated for with the analyzer OFFSET function.
All other types of emissions from the EUT shall meet the general limits for radiated frequencies outside the pass band. The test was performed at 3 channels (Channel 0, 39, 78)

11.5. Test Graphs

Date of Test 02/22/2016

Mode 2: GFSK TX Mode	
2402 MHz	
2441 MHz	
2480 MHz	

Mode 2: GFSK TX Mode _ Un-hopping	
2402 MHz	
2480 MHz	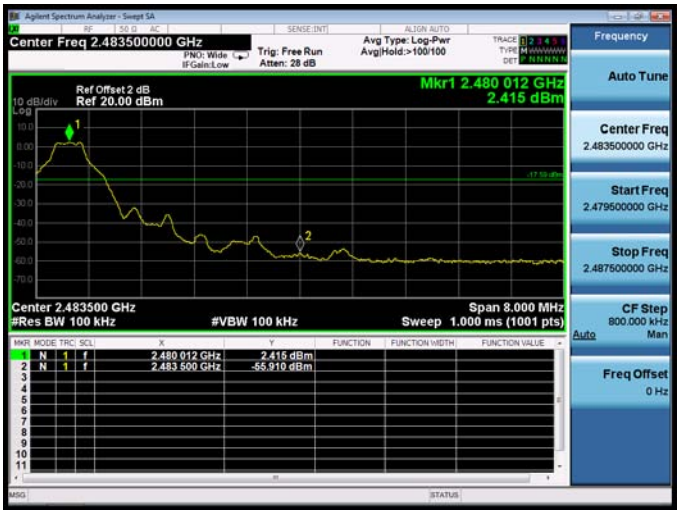

Mode 2: GFSK TX Mode _ Hopping	
2402 ~ 2480 MHz	

Mode 4: 8DPSK TX Mode	
2402 MHz	
2441 MHz	
2480 MHz	

Mode 4: 8DPSK TX Mode _ Un-hopping	
2402 MHz	
2480 MHz	

Mode 4: 8DPSK TX Mode _ Hopping	
2402 ~ 2480 MHz	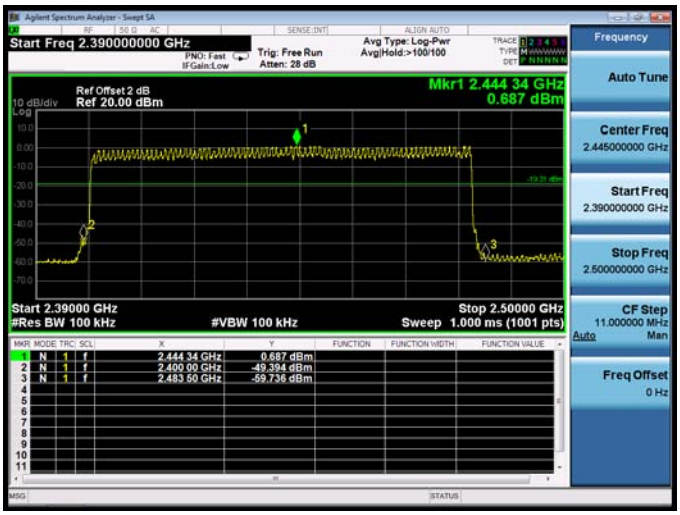

12 Antenna Measurement

12.1. Limit

For intentional device, according to 15.203, an intentional radiator shall be designed to ensure that no antenna other than that furnished by the responsible party shall be used with the device.
And According to 15.247 (b)(4), if transmitting antennas of directional gain greater than 6 dBi are used, the power shall be reduced by the amount in dB that the directional gain of the antenna exceeds 6dBi.

12.2. Antenna Connector Construction

The antenna used in this product is PCB Antenna. And the maximum Gain of this antenna is only 0 dBi.