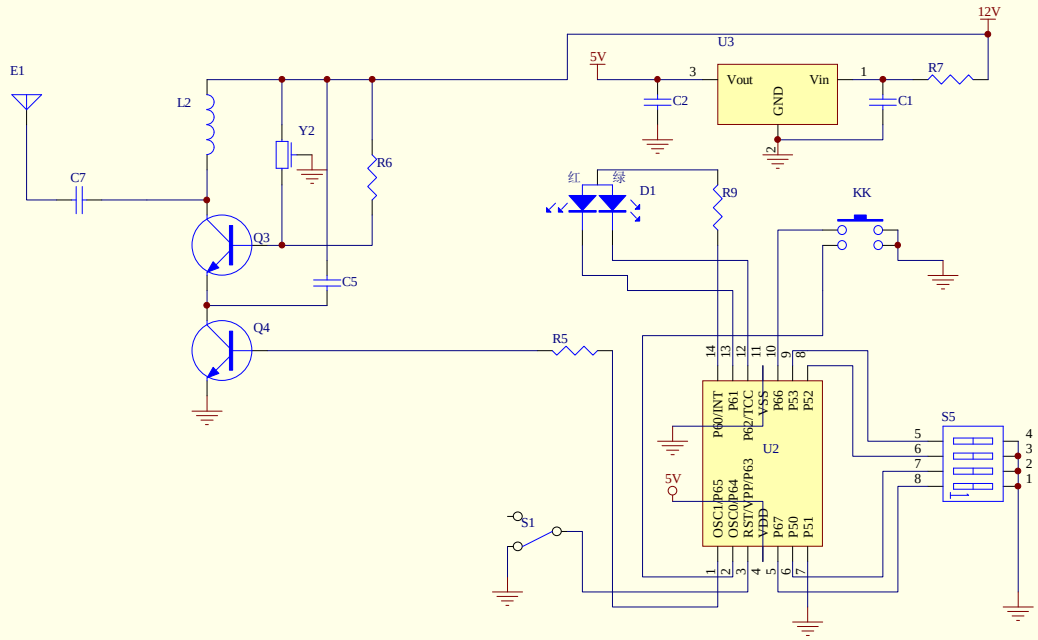Schematic diagram