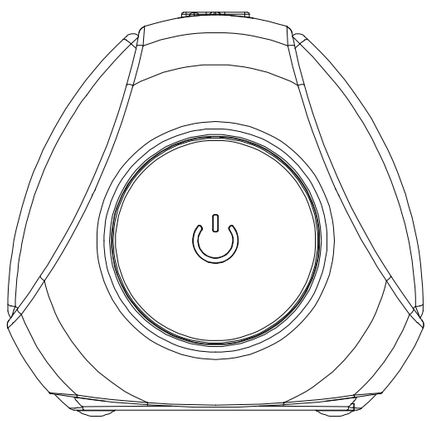

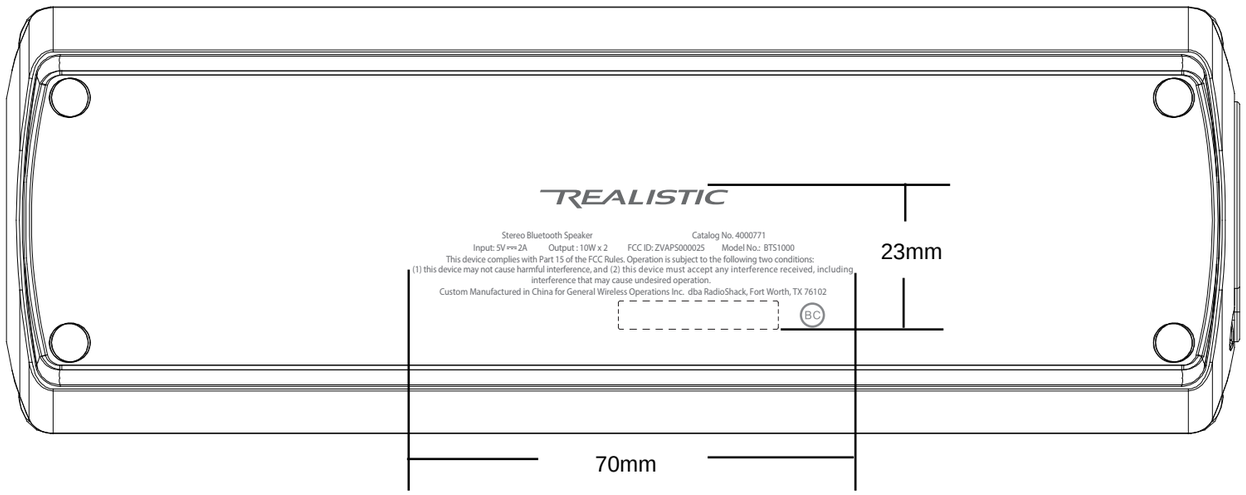
REALISTIC
Stereo Bluetooth Speaker
Catalog No. 4000771
Input: 5V ⎓2A
Output : 10W x 2
FCC ID: ZVAPS000025
Model No.: BTS1000
This device complies with Part 15 of the FCC Rules. Operation is subject to the following two conditions:
(1) this device may not cause harmful interference, and (2) this device must accept any interference received, including interference that may cause undesired operation.
Custom Manufactured in China for General Wireless Operations Inc. dba RadioShack, Fort Worth, TX 76102
BC
23mm
70mm

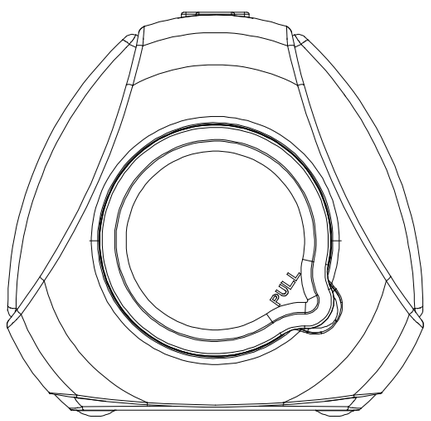
PULL

REALISTIC
Stereo Bluetooth Speaker
Catalog No. 4000771
Input: 5V ⎓2A
Output : 10W x 2
FCC ID: ZVAPS000025
Model No.: BTS1000
This device complies with Part 15 of the FCC Rules. Operation is subject to the following two conditions:
(1) this device may not cause harmful interference, and (2) this device must accept any interference received, including interference that may cause undesired operation.
Custom Manufactured in China for General Wireless Operations Inc. dba RadioShack, Fort Worth, TX 76102
BC

Bottom