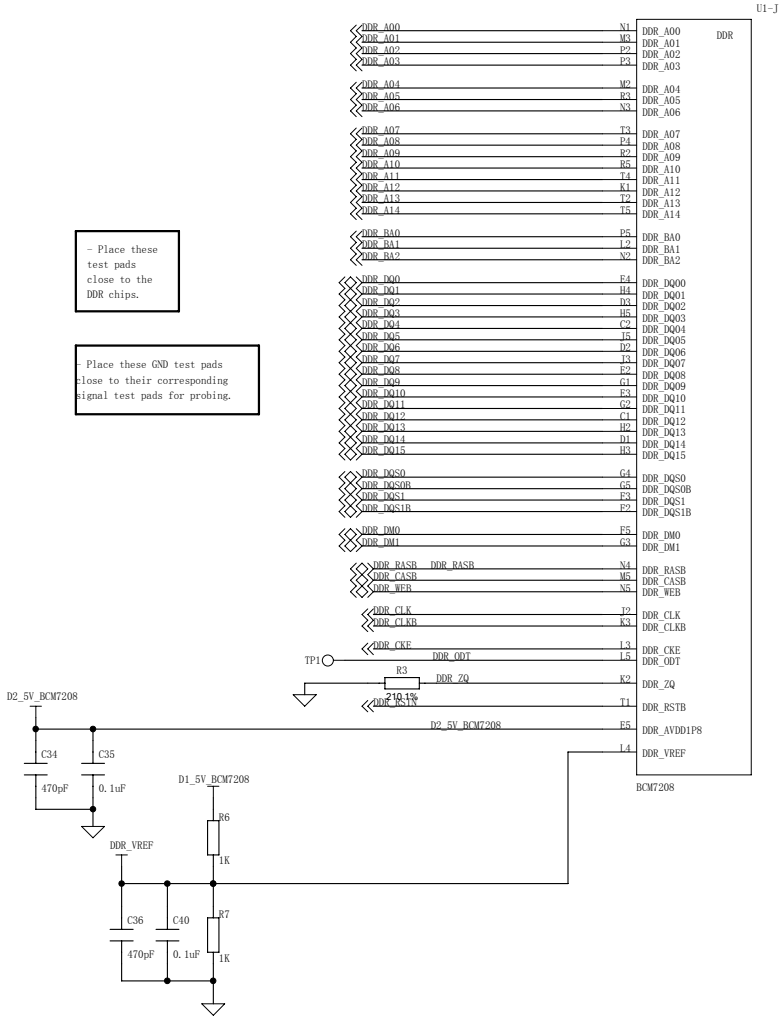
U1-J
DDR
BCM7208
- Place these test pads close to the DDR chips.
- Place these GND test pads close to their corresponding signal test pads for probing.
DDR_A00 N1
DDR_A01 M3
DDR_A02 P2
DDR_A03 P3
DDR_A04 M2
DDR_A05 R3
DDR_A06 N3
DDR_A07 T3
DDR_A08 P4
DDR_A09 R2
DDR_A10 R5
DDR_A11 T4
DDR_A12 K1
DDR_A13 T2
DDR_A14 T5
DDR_BA0 P5
DDR_BA1 L2
DDR_BA2 N2
DDR_DQ0 F4
DDR_DQ1 H4
DDR_DQ2 D3
DDR_DQ3 H5
DDR_DQ4 C2
DDR_DQ5 J5
DDR_DQ6 D2
DDR_DQ7 J3
DDR_DQ8 E2
DDR_DQ9 G1
DDR_DQ10 E3
DDR_DQ11 G2
DDR_DQ12 C1
DDR_DQ13 H2
DDR_DQ14 D1
DDR_DQ15 H3
DDR_DQS0 G4
DDR_DQS0B G5
DDR_DQS1 F3
DDR_DQS1B F2
DDR_DM0 F5
DDR_DM1 G3
DDR_RASB N4
DDR_CASB M5
DDR_WEB N5
DDR_CLK J2
DDR_CLKB K3
DDR_CKE L3
DDR_ODT L5
DDR_ZQ K2
DDR_RSTB T1
D2_5V_BCM7208 E5
DDR_VREF L4
TP1
R3
210 1%
C34
470pF
C35
0.1uF
D1_5V_BCM7208
R6
1K
DDR_VREF
C36
470pF
C40
0.1uF
R7
1K

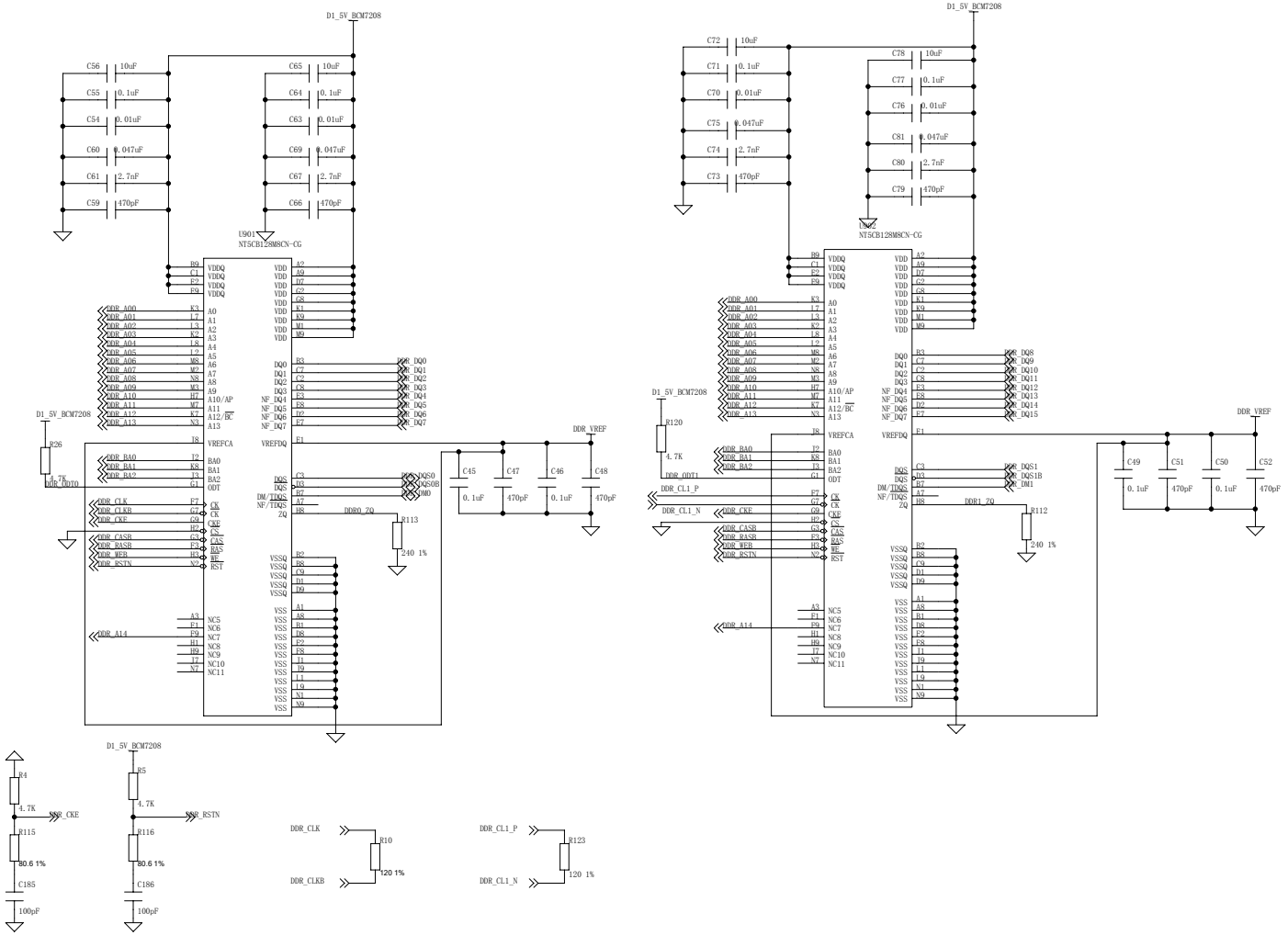
D1_5V_BCM7208
U901
NT5CB128M8CN-CG
C56 10uF
C55 0.1uF
C54 0.01uF
C60 0.047uF
C61 2.7nF
C59 470pF
C65 10uF
C64 0.1uF
C63 0.01uF
C69 0.047uF
C67 2.7nF
C66 470pF
DDR_A00
DDR_A01
DDR_A02
DDR_A03
DDR_A04
DDR_A05
DDR_A06
DDR_A07
DDR_A08
DDR_A09
DDR_A10
DDR_A11
DDR_A12
DDR_A13
DDR_BA0
DDR_BA1
DDR_BA2
DDR_CLK
DDR_CLKB
DDR_CKE
DDR_CASB
DDR_RASB
DDR_WEB
DDR_RSTN
DDR_A14
DDR_DQ0
DDR_DQ1
DDR_DQ2
DDR_DQ3
DDR_DQ4
DDR_DQ5
DDR_DQ6
DDR_DQ7
DDR_DQS0
DDR_DQS0B
DDR_DM0
DDR_VREF
R26
4.7K
DDR_ODT0
C45 0.1uF
C47 470pF
C46 0.1uF
C48 470pF
DDR0_ZQ
R113
240 1%
R4
4.7K
NSR_CKE
R115
80.6 1%
C185
100pF
R5
4.7K
NSR_RSTN
R116
80.6 1%
C186
100pF
DDR_CLK
DDR_CLKB
R10
120 1%
DDR_CL1_P
DDR_CL1_N
R123
120 1%
C72 10uF
C71 0.1uF
C70 0.01uF
C75 0.047uF
C74 2.7nF
C73 470pF
C78 10uF
C77 0.1uF
C76 0.01uF
C81 0.047uF
C80 2.7nF
C79 470pF
NC
R120
4.7K
DDR_ODT1
DDR_DQ8
DDR_DQ9
DDR_DQ10
DDR_DQ11
DDR_DQ12
DDR_DQ13
DDR_DQ14
DDR_DQ15
DDR_DQS1
DDR_DQS1B
DDR_DM1
DDR1_ZQ
R112
240 1%
C49 0.1uF
C51 470pF
C50 0.1uF
C52 470pF

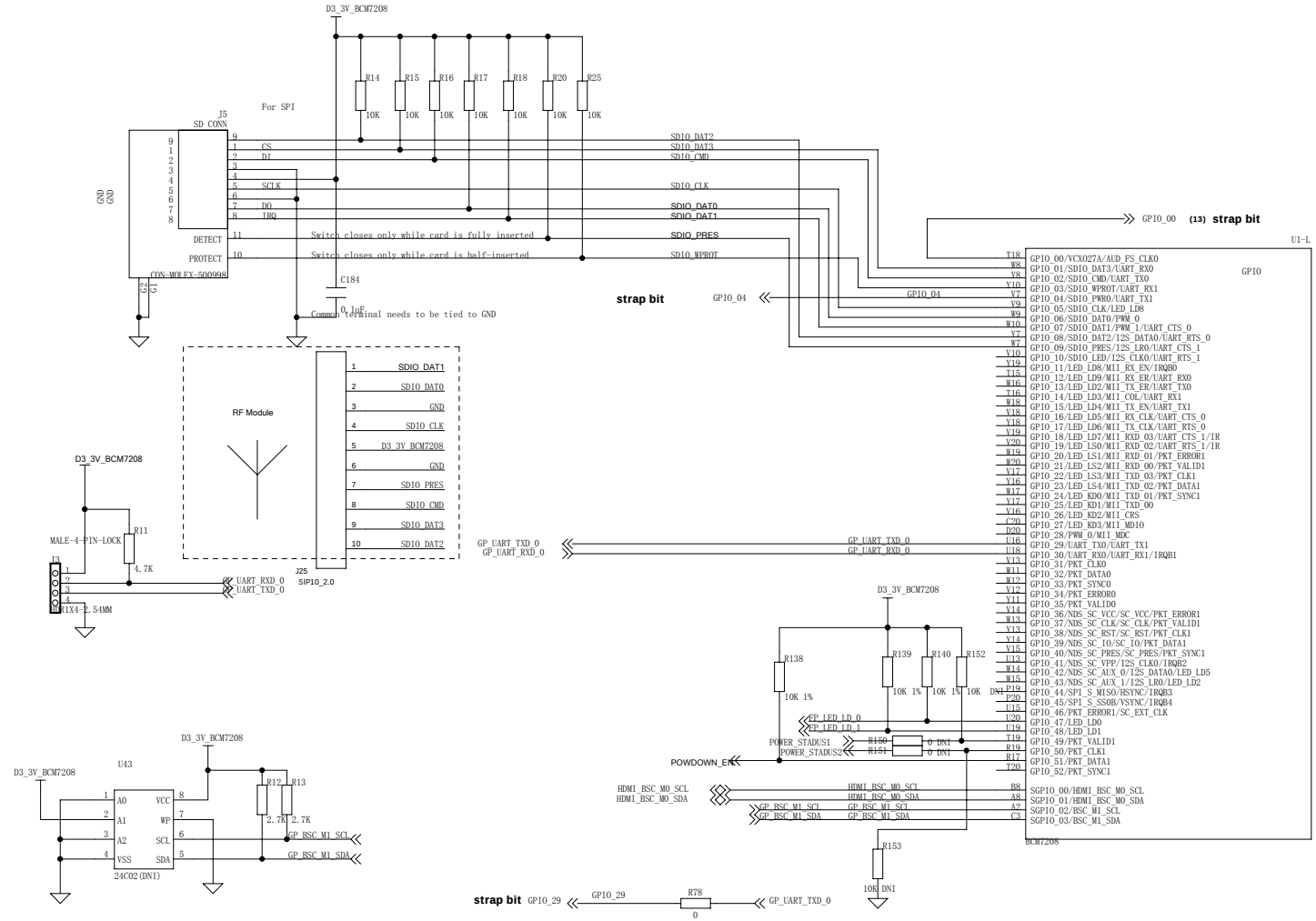
D3_3V_BCM7208
R14 R15 R16 R17 R18 R20 R25
10K
For SPI
J5
SD_CONN
CS
DI
SCLK
DO
IRQ
DETECT
PROTECT
CON-MOLEX-500998
C183
C182
C184
0.1uF
Common terminal needs to be tied to GND
SDIO_DAT2
SDIO_DAT3
SDIO_CMD
SDIO_CLK
SDIO_DAT0
SDIO_DAT1
SDIO_PRES
SDIO_WPROT
Switch closes only while card is fully inserted
Switch closes only while card is half-inserted
GPIO_00 (13) strap bit
U1-L
GPIO
strap bit
GPIO_04
RF Module
SDIO_DAT1
SDIO_DAT0
GND
SDIO_CLK
D3_3V_BCM7208
GND
SDIO_PRES
SDIO_CMD
SDIO_DAT3
SDIO_DAT2
J25
SIP10_2.0
MALE-4-PIN-LOCK
R11
4.7K
HDR1X4-2.54MM
GP_UART_RXD_0
GP_UART_TXD_0
GP_UART_TXD_0
GP_UART_RXD_0
U43
24C02(DNI)
R12 R13
2.7K 2.7K
GP_BSC_M1_SCL
GP_BSC_M1_SDA
R138
10K 1%
R139 R140 R152
10K 1% 10K 1% 10K DNI
GP_LED_LD_0
GP_LED_LD_1
POWER_STADUS1
POWER_STADUS2
R150 R151
0 DNI
POWDOWN_EN
HDMI_BSC_M0_SCL
HDMI_BSC_M0_SDA
GP_BSC_M1_SCL
GP_BSC_M1_SDA
R153
10K DNI
strap bit
GPIO_29
R78
0
BCM7208

BCM7208 Strap Options

Strap Name	Strap Bit	Description	Pin	Default	Comments	Dare T010PL-750A-ZZ 2010.6.23
Flash_Type	strap_boot_device(2) strap_boot_device(1) strap_boot_device(0)	0: NAND + 1-bit Hamming 1: NAND + 4-bit BCH @16B-spare 2: NAND + 8-bit BCH @16B-spare 3: NAND + 8-bit BCH @27B-spare 4: NAND + 12-bit BCH @27B-spare 5: SPI-NOR 1-lane 6: SPI-NOR 2-lane 7: SPI-NOR 2-lane +fast-clock	GPIO_29 H GPIO_04 AUDO_SPDIF L	1 0 1	TBD	001 For 512Mbit NAND Flash
MIPS_Endian	strap_system_big_endian	0: System is LITTLE endian 1: System is BIG endian	USB0_PWRON	0	Per system configuration	0
XTAL_Adj	strap_xtal_adj	00: fundamental mode crystals 10: overtone mode crystals	USB1_PWRON	0	Per system configuration	1
XTAL_Highpass	strap_xtal_highpass	0: 1: 54MHz xtal frequency	GPIO_00	1	default=1(for 54MHz xtal frequency)	1

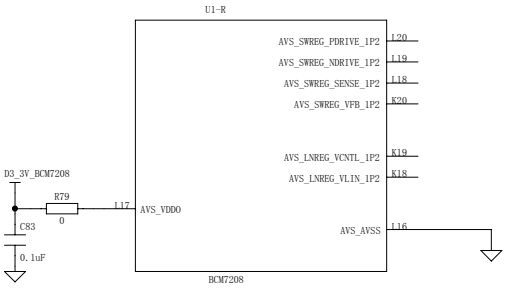

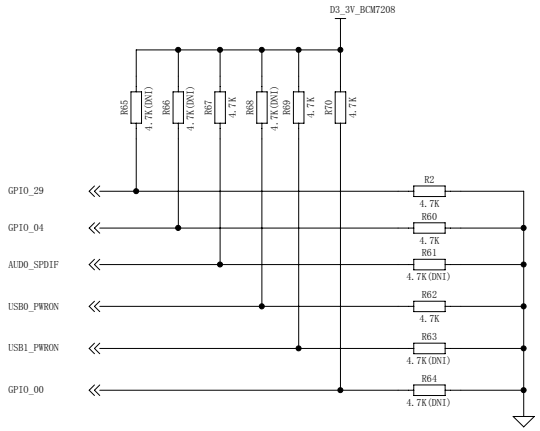

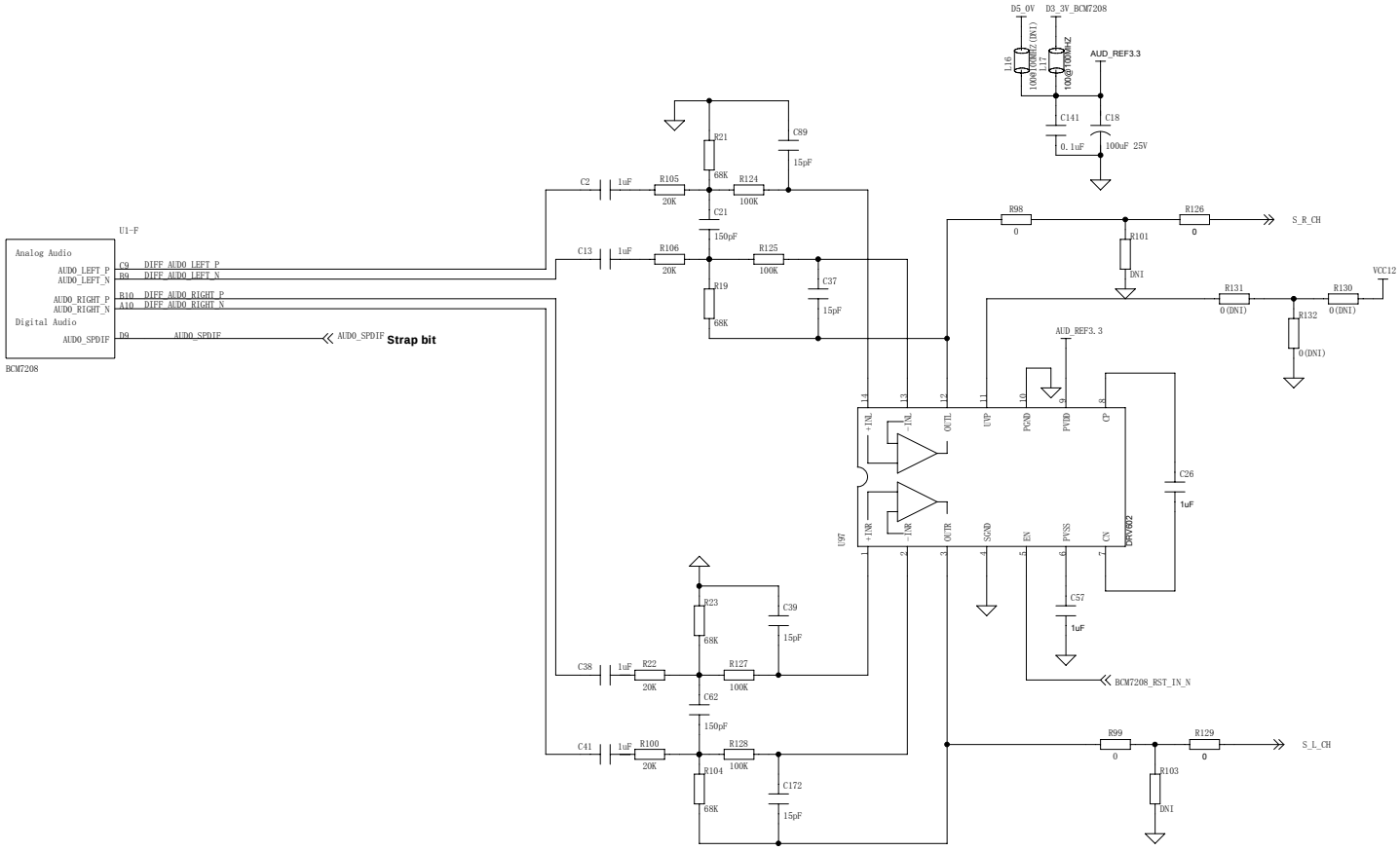

D5_0V
D3_3V_BCM7208
L16
100@100MHZ(DNI)
L17
100@100MHZ
AUD_REF3.3
C141
0.1uF
C18
100uF 25V
U1-F
Analog Audio
AUDO_LEFT_P
AUDO_LEFT_N
AUDO_RIGHT_P
AUDO_RIGHT_N
Digital Audio
AUDO_SPDIF
C9 DIFF_AUDO_LEFT_P
B9 DIFF_AUDO_LEFT_N
B10 DIFF_AUDO_RIGHT_P
A10 DIFF_AUDO_RIGHT_N
D9 AUDO_SPDIF
AUDO_SPDIF
Strap bit
BCM7208
C2 1uF R105 20K R21 68K R124 100K C89 15pF
C21 150pF
C13 1uF R106 20K R125 100K C37 15pF
R19 68K
R98 0
R126 0
S_R_CH
R101 DNI
VCC12
R131 0(DNI)
R130 0(DNI)
R132 0(DNI)
AUD_REF3.3
U97
+INL
-INL
OUTL
UVP
PGND
PVDD
CP
+INR
-INR
OUTR
SGND
EN
PVSS
CN
DRV602
C26 1uF
C57 1uF
BCM7208_RST_IN_N
R23 68K
C39 15pF
C38 1uF R22 20K R127 100K
C62 150pF
C41 1uF R100 20K R128 100K
R104 68K
C172 15pF
R99 0
R129 0
S_L_CH
R103 DNI

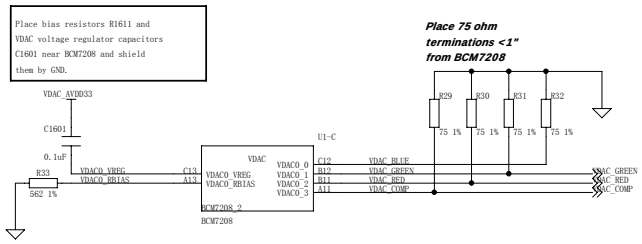
Place bias resistors R1611 and
VDAC voltage regulator capacitors
C1601 near BCM7208 and shield
them by GND.
Place 75 ohm
terminations <1"
from BCM7208
VDAC_AVDD33
C1601
0.1uF
R33
562 1%
VDACO_VREG
VDACO_RBIAS
C13
A13
U1-C
VDAC
VDACO_VREG
VDACO_RBIAS
VDACO_0
VDACO_1
VDACO_2
VDACO_3
C12
B12
B11
A11
VDAC_BLUE
VDAC_GREEN
VDAC_RED
VDAC_COMP
BCM7208_2
BCM7208
R29
R30
R31
R32
75 1%
75 1%
75 1%
75 1%
VDAC_GREEN
VDAC_RED
VDAC_COMP

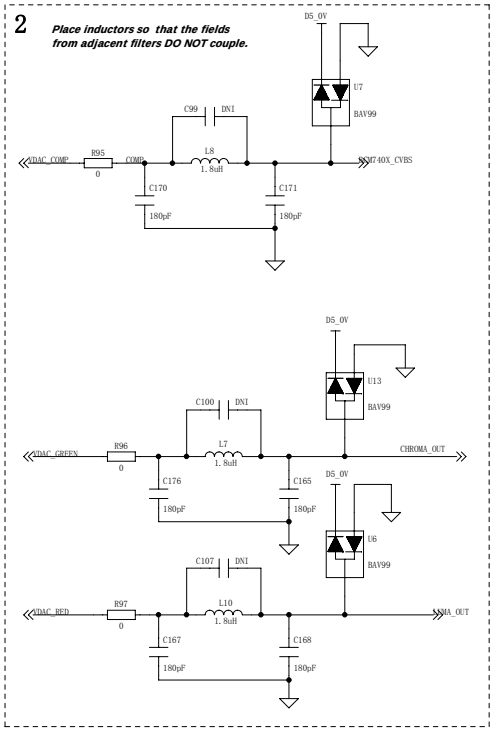
2
Place inductors so that the fields
from adjacent filters DO NOT couple.
D5_0V
U7
BAV99
C99
DNI
VDAC_COMP
R95
0
COMP
L8
1.8uH
BCM740X_CVBS
C170
180pF
C171
180pF
D5_0V
U13
BAV99
C100
DNI
VDAC_GREEN
R96
0
L7
1.8uH
CHROMA_OUT
C176
180pF
C165
180pF
D5_0V
U6
BAV99
C107
DNI
VDAC_RED
R97
0
L10
1.8uH
LUMA_OUT
C167
180pF
C168
180pF

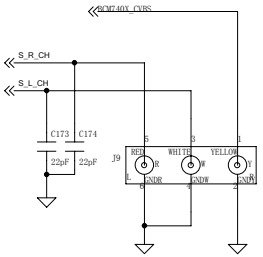
BCM740X_CVBS
S_R_CH
S_L_CH
C173
22pF
C174
22pF
J9
RED
WHITE
YELLOW
GNDR
GNDW
GNDY

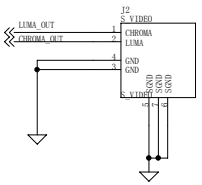
J2
S_VIDEO
LUMA_OUT
CHROMA_OUT
CHROMA
LUMA
GND
GND
S_VIDEO
GND
GND
GND

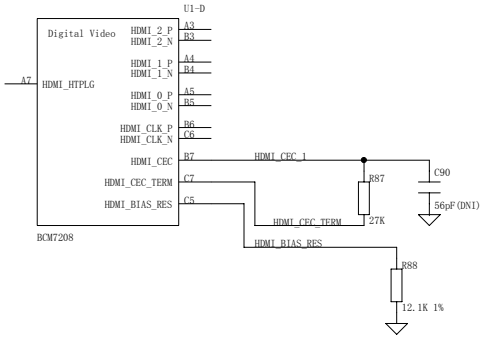

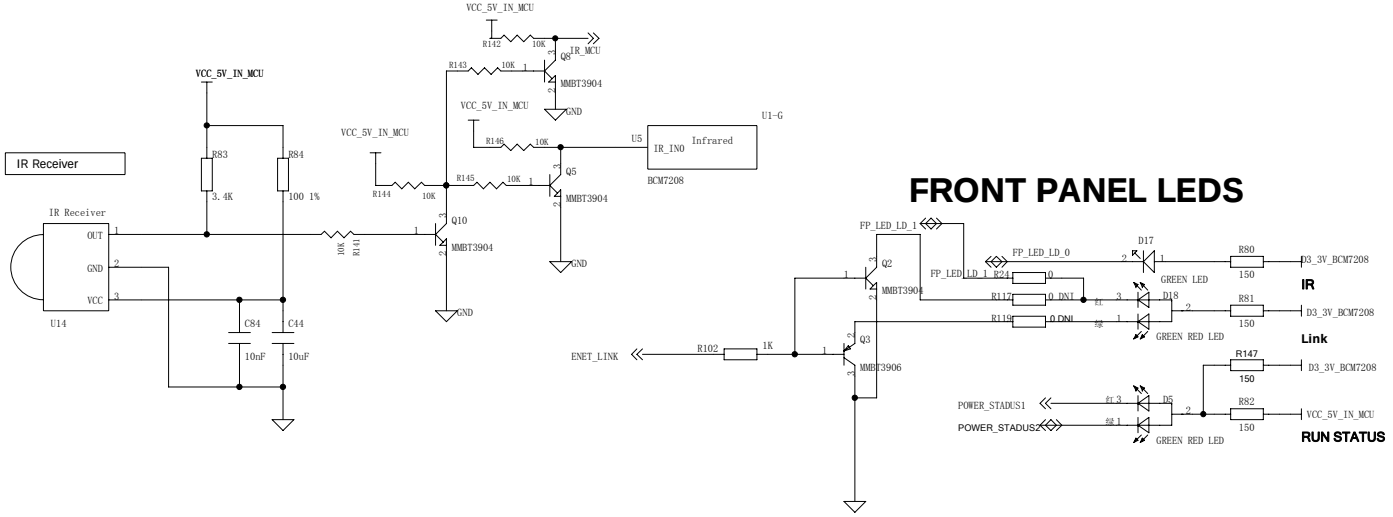

FRONT PANEL LEDS

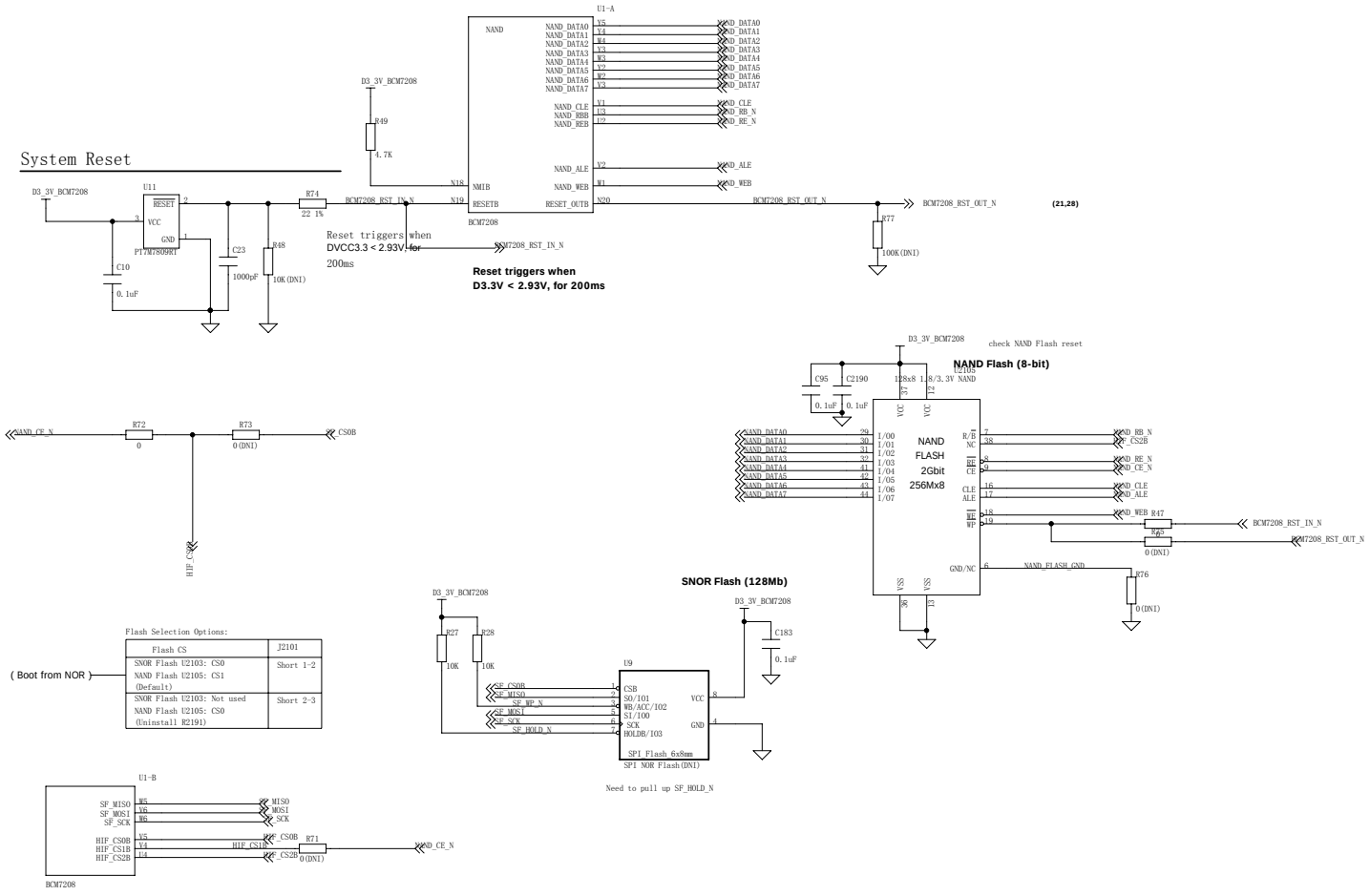
System Reset
U1-A
NAND
NAND_DATA0
NAND_DATA1
NAND_DATA2
NAND_DATA3
NAND_DATA4
NAND_DATA5
NAND_DATA6
NAND_DATA7
NAND_CLE
NAND_RBB
NAND_REB
NAND_ALE
NAND_WEB
NMIB
RESETB
RESET_OUTB
BCM7208
D3_3V_BCM7208
R49
1.7K
R74
22 1%
BCM7208_RST_IN_N
BCM7208_RST_OUT_N
R77
100K(DNI)
U11
RESET
VCC
GND
P17M7809RT
C10
0.1uF
C23
1000pF
R48
10K(DNI)
Reset triggers when
DVCC3.3 < 2.93V, for
200ms
Reset triggers when
D3.3V < 2.93V, for 200ms
(21,28)
check NAND Flash reset
NAND Flash (8-bit)
U2105
128x8 1.8/3.3V NAND
C95
C2190
C37
C2
NAND
FLASH
2Gbit
256Mx8
R72
R73
0
0(DNI)
NAND_CE_N
HIF_CS0B
SF_CS0B
SF_CS2B
NAND_RB_N
NAND_RE_N
NAND_CLE
NAND_ALE
NAND_WEB
R47
R75
R76
NAND_FLASH_GND
SNOR Flash (128Mb)
U9
SPI_Flash_6x8mm
SPI NOR Flash(DNI)
C183
R27
R28
10K
SF_CSOB
SF_MISO
SF_WP_N
SF_MOSI
SF_SCK
SF_HOLD_N
Need to pull up SF_HOLD_N
Flash Selection Options:
Flash CS
J2101
SNOR Flash U2103: CS0
NAND Flash U2105: CS1
(Default)
Short 1-2
SNOR Flash U2103: Not used
NAND Flash U2105: CS0
(Uninstall R2191)
Short 2-3
(Boot from NOR)
U1-B
SF_MISO
SF_MOSI
SF_SCK
HIF_CS0B
HIF_CS1B
HIF_CS2B
R71
BCM7208

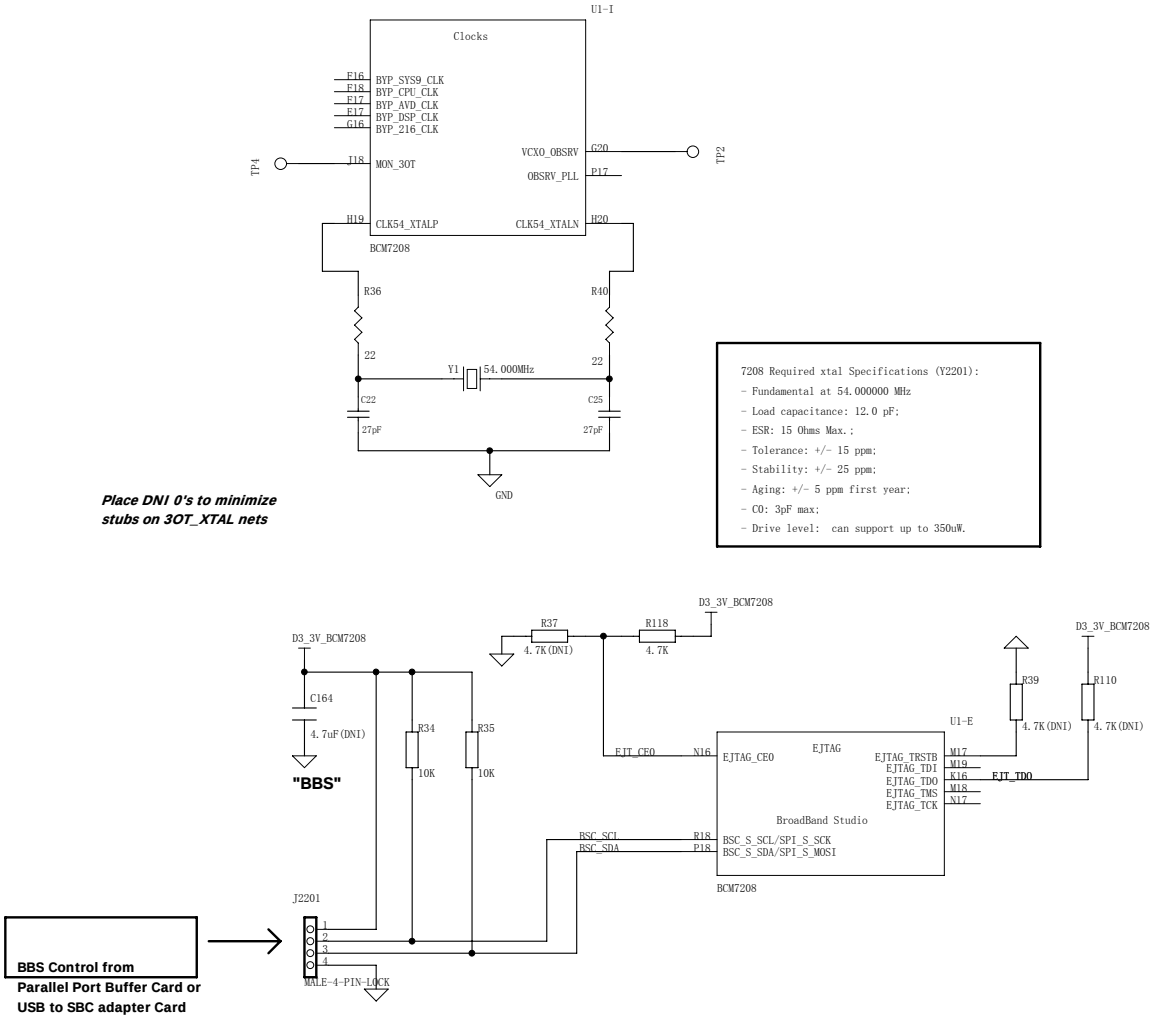
U1-I
Clocks
F16 BYP_SYS9_CLK
F18 BYP_CPU_CLK
F17 BYP_AVD_CLK
F17 BYP_DSP_CLK
G16 BYP_216_CLK
TP4
J18 MON_3OT
VCXO_OBSRV G20
OBSRV_PLL P17
TP2
H19 CLK54_XTALP
CLK54_XTALN H20
BCM7208
R36
R40
22
22
Y1 54.000MHz
C22
27pF
C25
27pF
GND
Place DNI 0's to minimize stubs on 3OT_XTAL nets
7208 Required xtal Specifications (Y2201):
- Fundamental at 54.000000 MHz
- Load capacitance: 12.0 pF;
- ESR: 15 Ohms Max.;
- Tolerance: +/- 15 ppm;
- Stability: +/- 25 ppm;
- Aging: +/- 5 ppm first year;
- C0: 3pF max;
- Drive level: can support up to 350uW.
D3_3V_BCM7208
R37
4.7K(DNI)
R118
4.7K
D3_3V_BCM7208
D3_3V_BCM7208
R39
R110
4.7K(DNI)
4.7K(DNI)
C164
4.7uF(DNI)
"BBS"
R34
R35
10K
10K
U1-E
EJTAG
EJT_CE0
N16
EJTAG_CE0
EJTAG_TRSTB M17
EJTAG_TDI M19
EJTAG_TDO K16
EJTAG_TMS M18
EJTAG_TCK N17
EJT_TDO
BroadBand Studio
BSC_SCL R18
BSC_SDA P18
BSC_S_SCL/SPI_S_SCK
BSC_S_SDA/SPI_S_MOSI
BCM7208
J2201
1
2
3
4
MALE-4-PIN-LOCK
BBS Control from Parallel Port Buffer Card or USB to SBC adapter Card

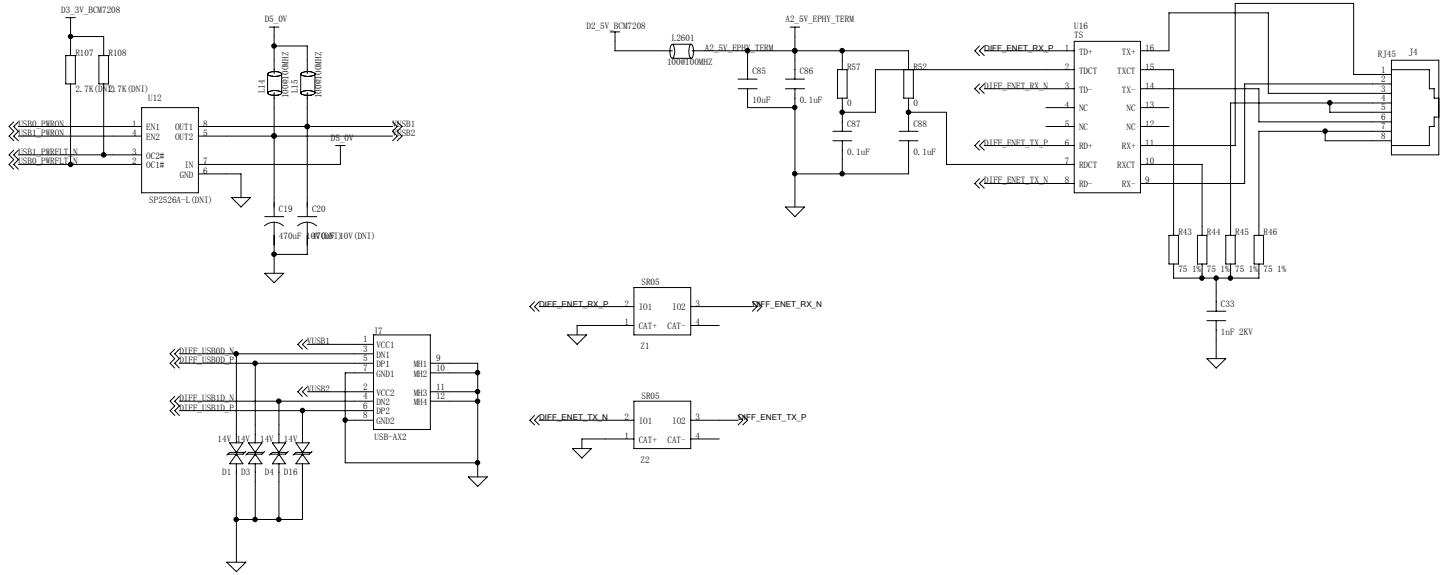
D3_3V_BCM7208
R107
R108
2.7K(DNI)
2.7K(DNI)
U12
USB0_PWRON
USB1_PWRON
USB1_PWRFLT_N
USB0_PWRFLT_N
EN1
EN2
OC2#
OC1#
OUT1
OUT2
IN
GND
SP2526A-L(DNI)
D5_0V
L14
600R100MHZ
L15
600R100MHZ
USB1
USB2
C19
470uF
C20
470uF 10V(DNI)
D2_5V_BCM7208
L2601
600R100MHZ
A2_5V_EPHY_TERM
C85
10uF
C86
0.1uF
R57
0
R52
0
C87
0.1uF
C88
0.1uF
U16
TS
DIFF_ENET_RX_P
DIFF_ENET_RX_N
DIFF_ENET_TX_P
DIFF_ENET_TX_N
TD+
TD-
NC
NC
RD+
RD-
TCT
TCT
RCT
RCT
TX+
TX-
NC
NC
RX+
RX-
RJ45
J4
R43
R44
R45
R46
75 1%
C33
1nF 2KV
SR05
Z1
SR05
Z2
J7
USB-AX2
DIFF_USB0D_N
DIFF_USB0D_P
DIFF_USB1D_N
DIFF_USB1D_P
VCC1
DN1
DP1
GND1
VCC2
DN2
DP2
GND2
MH1
MH2
MH3
MH4
14V
D1
D3
D4
D16
BCM7208
U1-K
Ethernet
USB
EPHY_RDAC
EPHY_VREF
EPHY_RDP
EPHY_RDN
EPHY_TDP
EPHY_TDN
ENET_LINK/LED_LD3
ENET_ACTIVITY/LED_LD2
USB_RREF
USB_MONPLL
USB_MONCDR
USB0_DP
USB0_DN
USB0_PWRON
USB0_PWRFLT
USB1_DP
USB1_DN
USB1_PWRON
USB1_PWRFLT
R42
1.24K 1%
C154
100pF
R51
4.02K 1%
D6
D7
D8
D9
ENET_LINK
Strap Bits

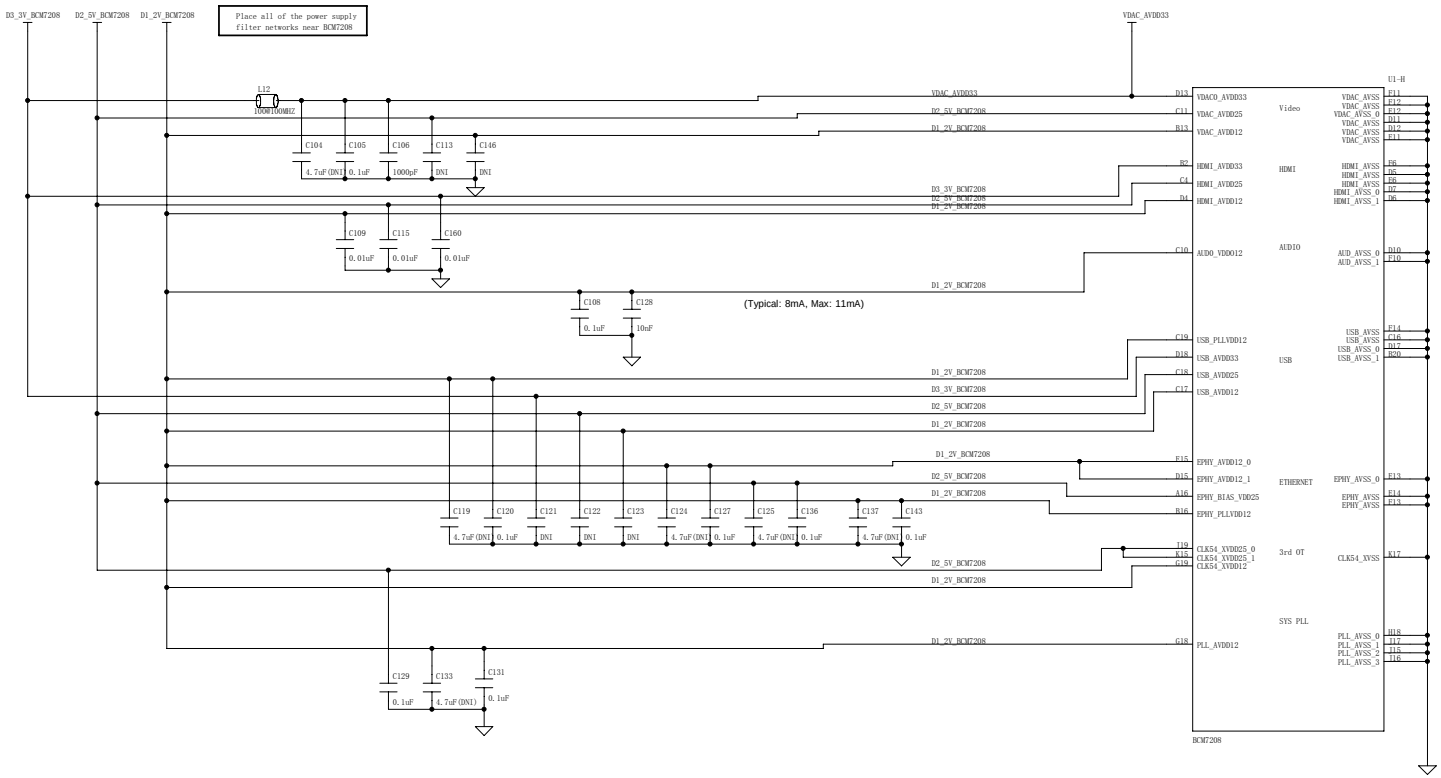

D3_3V_BCM7208
D2_5V_BCM7208
D1_2V_BCM7208
Place all of the power supply filter networks near BCM7208
VDAC_AVDD33
L12
100@100MHZ
C104
C105
C106
C113
C146
4.7uF(DNI)
0.1uF
1000pF
DNI
C109
C115
C160
0.01uF
C108
C128
0.1uF
10nF
(Typical: 8mA, Max: 11mA)
C119
C120
C121
C122
C123
C124
C127
C125
C136
C137
C143
C129
C133
C131
VDAC0_AVDD33
VDAC_AVDD25
VDAC_AVDD12
HDMI_AVDD33
HDMI_AVDD25
HDMI_AVDD12
AUD0_VDD012
USB_PLLVDD12
USB_AVDD33
USB_AVDD25
USB_AVDD12
EPHY_AVDD12_0
EPHY_AVDD12_1
EPHY_BIAS_VDD25
EPHY_PLLVDD12
CLK54_XVDD25_0
CLK54_XVDD25_1
CLK54_XVDD12
PLL_AVDD12
Video
HDMI
AUDIO
USB
ETHERNET
3rd OT
SYS PLL
U1-H
VDAC_AVSS
HDMI_AVSS
HDMI_AVSS_0
HDMI_AVSS_1
AUD_AVSS_0
AUD_AVSS_1
USB_AVSS
USB_AVSS_0
USB_AVSS_1
EPHY_AVSS_0
EPHY_AVSS
CLK54_XVSS
PLL_AVSS_0
PLL_AVSS_1
PLL_AVSS_2
PLL_AVSS_3
BCM7208

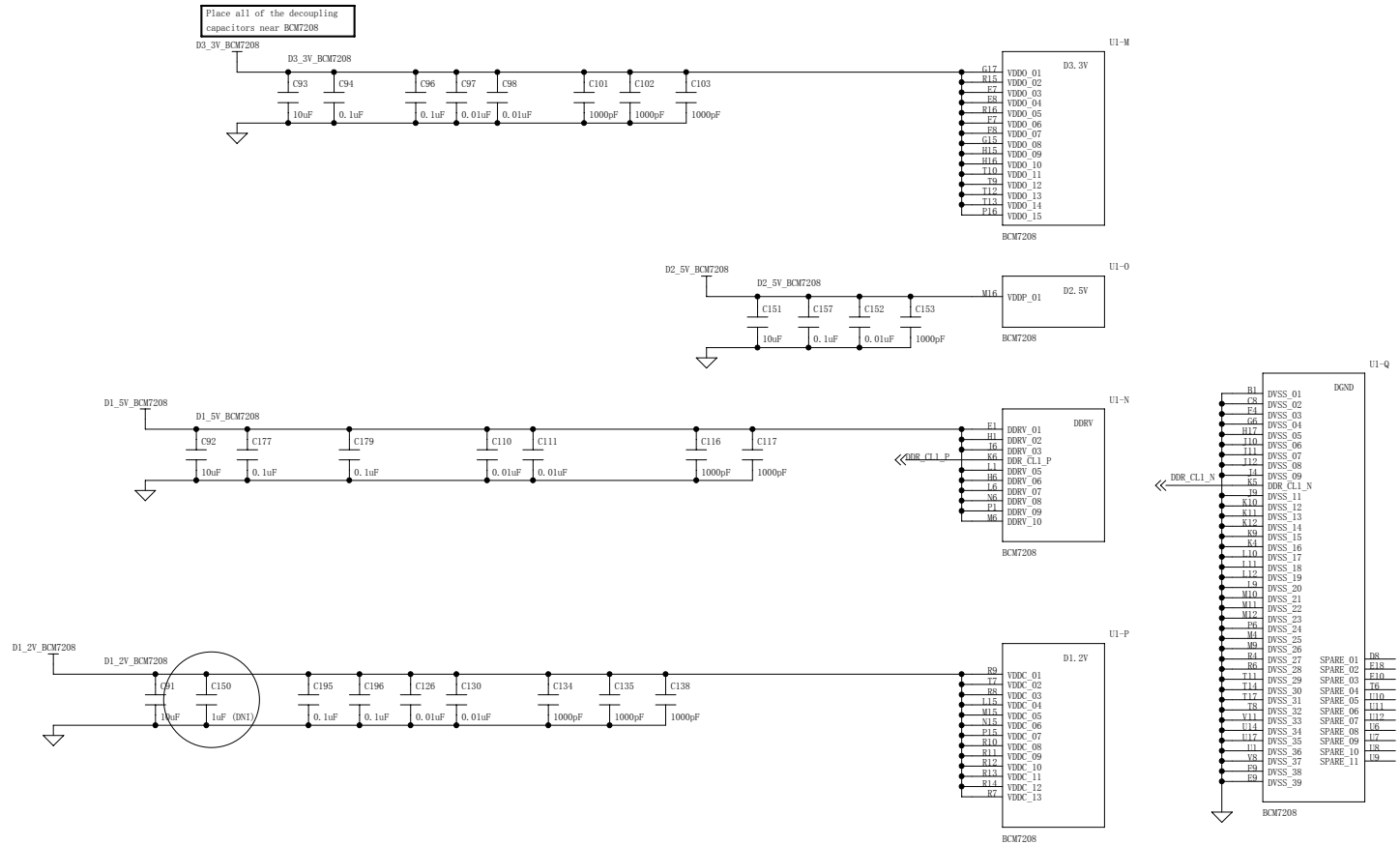
Place all of the decoupling capacitors near BCM7208
D3_3V_BCM7208
D3_3V_BCM7208
C93
C94
C96
C97
C98
C101
C102
C103
10uF
0.1uF
0.1uF
0.01uF
0.01uF
1000pF
1000pF
1000pF
U1-M
D3.3V
G17
R15
F7
E8
R16
F7
F8
G15
H15
H16
T10
T9
T12
T13
P16
VDDO_01
VDDO_02
VDDO_03
VDDO_04
VDDO_05
VDDO_06
VDDO_07
VDDO_08
VDDO_09
VDDO_10
VDDO_11
VDDO_12
VDDO_13
VDDO_14
VDDO_15
BCM7208
D2_5V_BCM7208
D2_5V_BCM7208
C151
C157
C152
C153
10uF
0.1uF
0.01uF
1000pF
U1-O
M16
VDDP_01
D2.5V
BCM7208
D1_5V_BCM7208
D1_5V_BCM7208
C92
C177
C179
C110
C111
C116
C117
10uF
0.1uF
0.1uF
0.01uF
0.01uF
1000pF
1000pF
U1-N
DDRV
E1
H1
I6
K6
L1
H6
L6
N6
P1
M6
DDRV_01
DDRV_02
DDRV_03
DDR_CL1_P
DDRV_05
DDRV_06
DDRV_07
DDRV_08
DDRV_09
DDRV_10
DDR_CL1_P
D1_2V_BCM7208
D1_2V_BCM7208
C91
C150
C195
C196
C126
C130
C134
C135
C138
10uF
1uF (DNI)
0.1uF
0.1uF
0.01uF
0.01uF
1000pF
1000pF
1000pF
U1-P
D1.2V
R9
T7
R8
L15
M15
N15
P15
R10
R11
R12
R13
R14
R7
VDDC_01
VDDC_02
VDDC_03
VDDC_04
VDDC_05
VDDC_06
VDDC_07
VDDC_08
VDDC_09
VDDC_10
VDDC_11
VDDC_12
VDDC_13
BCM7208
U1-Q
DGND
B1
C3
F4
G6
H17
J10
J11
J12
J4
K5
J9
K10
K11
K12
K9
K7
L10
L11
L12
L9
M10
M11
M12
P6
M4
M9
R4
R6
T11
T14
T17
T8
V11
U14
U17
U7
V8
F9
F3
DVSS_01
DVSS_02
DVSS_03
DVSS_04
DVSS_05
DVSS_06
DVSS_07
DVSS_08
DVSS_09
DDR_CL1_N
DVSS_11
DVSS_12
DVSS_13
DVSS_14
DVSS_15
DVSS_16
DVSS_17
DVSS_18
DVSS_19
DVSS_20
DVSS_21
DVSS_22
DVSS_23
DVSS_24
DVSS_25
DVSS_26
DVSS_27
DVSS_28
DVSS_29
DVSS_30
DVSS_31
DVSS_32
DVSS_33
DVSS_34
DVSS_35
DVSS_36
DVSS_37
DVSS_38
DVSS_39
SPARE_01
SPARE_02
SPARE_03
SPARE_04
SPARE_05
SPARE_06
SPARE_07
SPARE_08
SPARE_09
SPARE_10
SPARE_11
D8
E18
E10
T6
U10
U11
U12
U6
U2
U8
U9
DDR_CL1_N
BCM7208

power up sequense have not be adjust,maybe 3.3V need adjust slowly

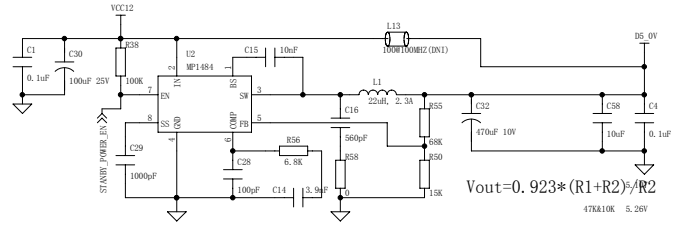

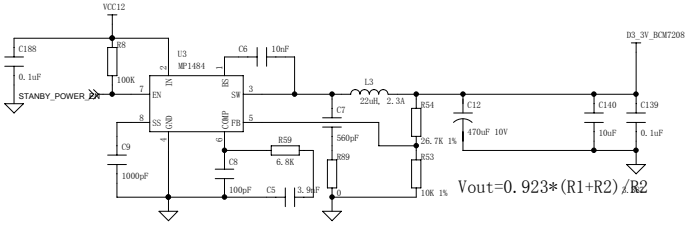

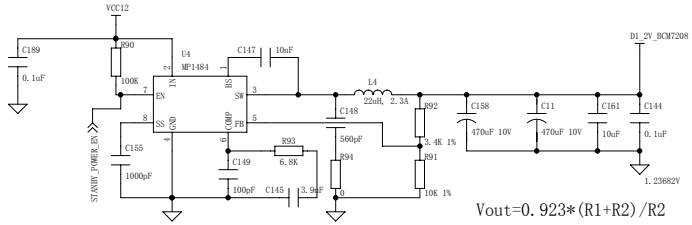

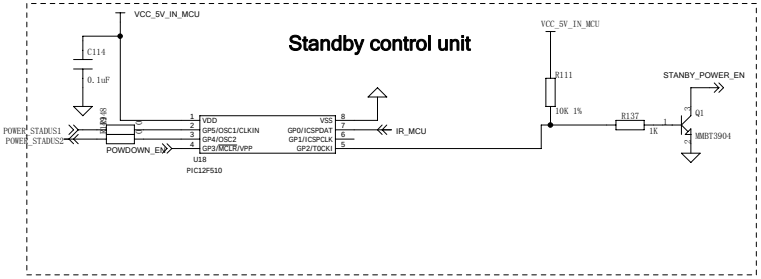

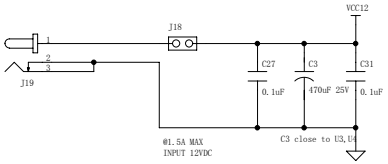

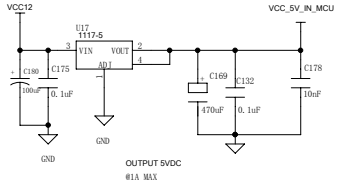

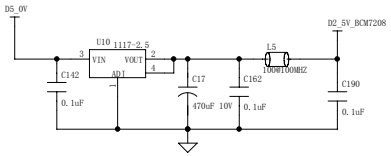

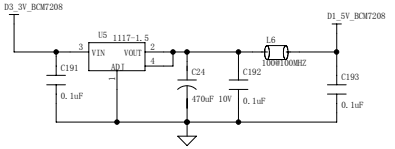

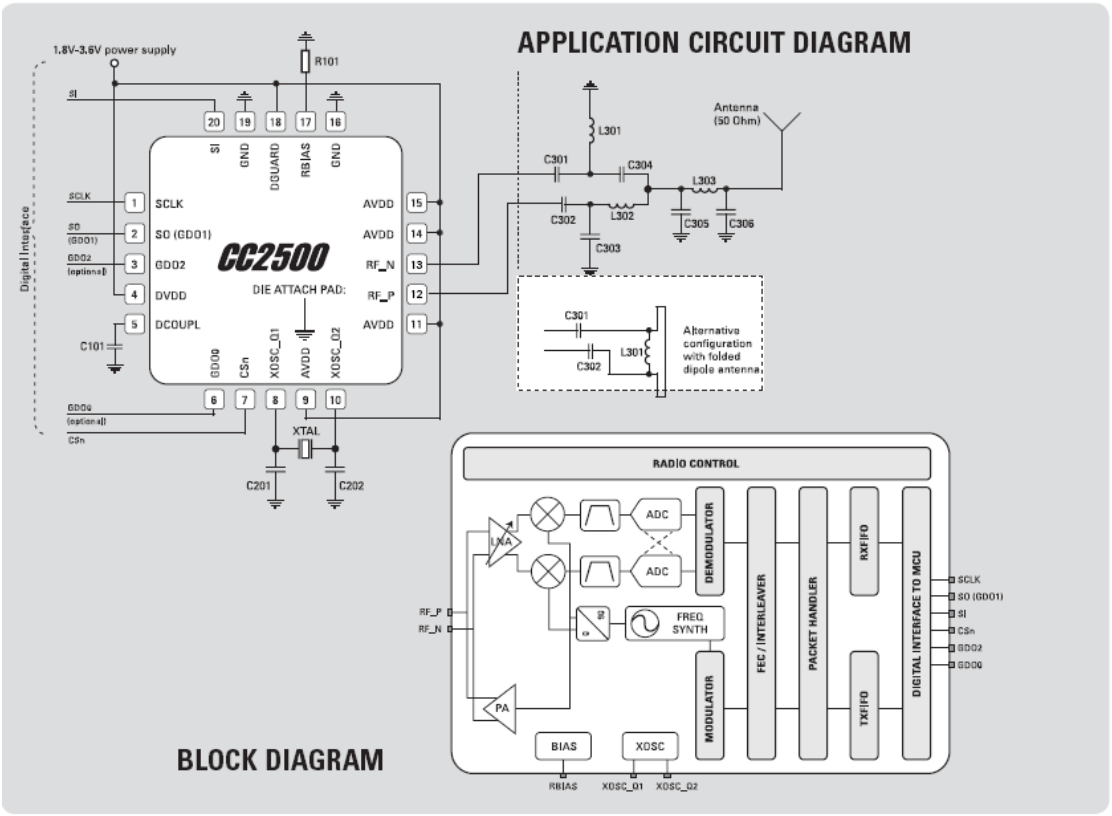
APPLICATION CIRCUIT DIAGRAM
1.8V-3.6V power supply
R101
SI
SCLK
SO (GDO1)
GDO2 (optional)
GDO0 (optional)
CSn
Digital Intsteface
CC2500
DIE ATTACH PAD:
SCLK
SO (GDO1)
GDO2
DVDD
DCOUPL
AVDD
AVDD
RF_N
RF_P
AVDD
GDO0
CSn
XOSC_Q1
AVDD
XOSC_Q2
C101
XTAL
C201
C202
L301
C301
C304
L303
C302
L302
C305
C306
C303
Antenna (50 Ohm)
Alternative configuration with folded dipole antenna
BLOCK DIAGRAM
RADIO CONTROL
LNA
ADC
ADC
DEMODULATOR
FEC / INTERLEAVER
PACKET HANDLER
RX FIFO
DIGITAL INTERFACE TO MCU
RF_P
RF_N
FREQ SYNTH
PA
MODULATOR
TX FIFO
BIAS
XOSC
RBIAS
XOSC_Q1
XOSC_Q2
SCLK
SO (GDO1)
SI
CSn
GDO2
GDO0