MODEL	DAS

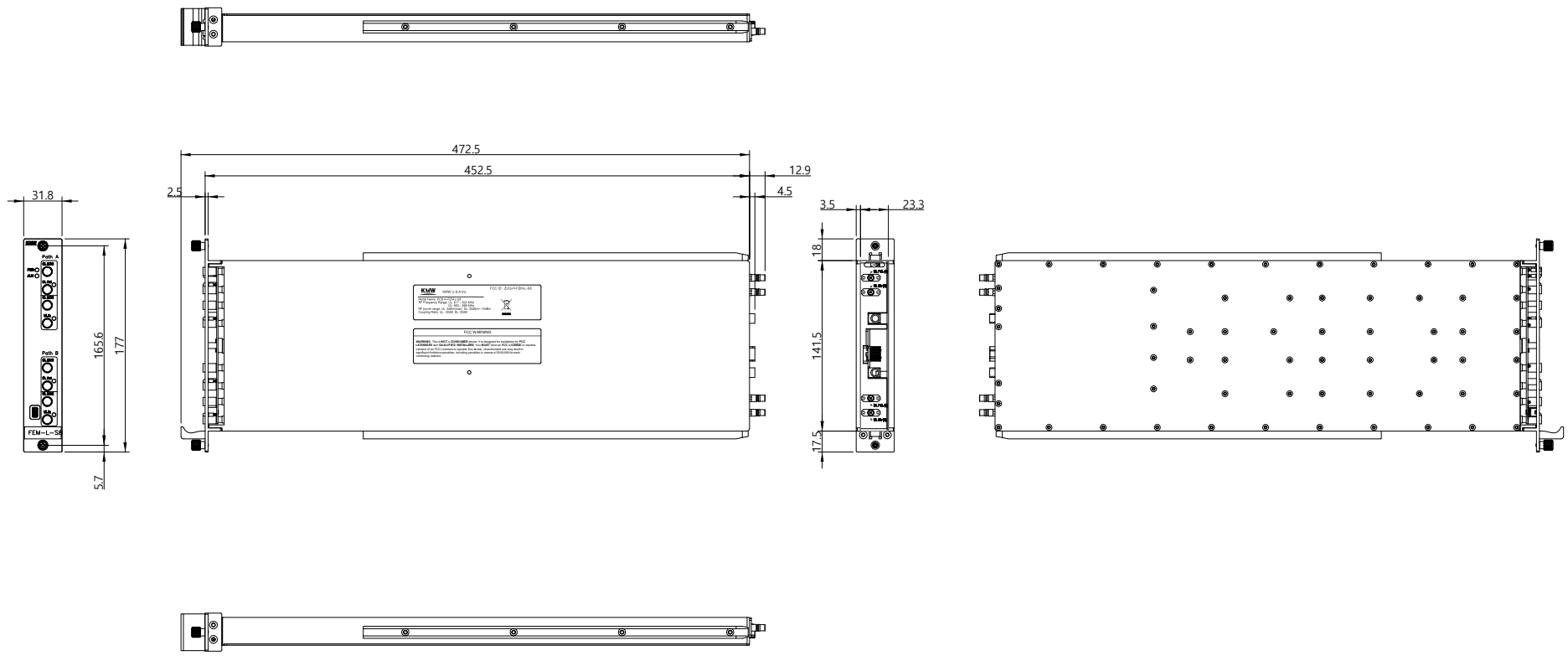

SCALE A3 x 1:3.5

TITLE	FEM-L-_S8