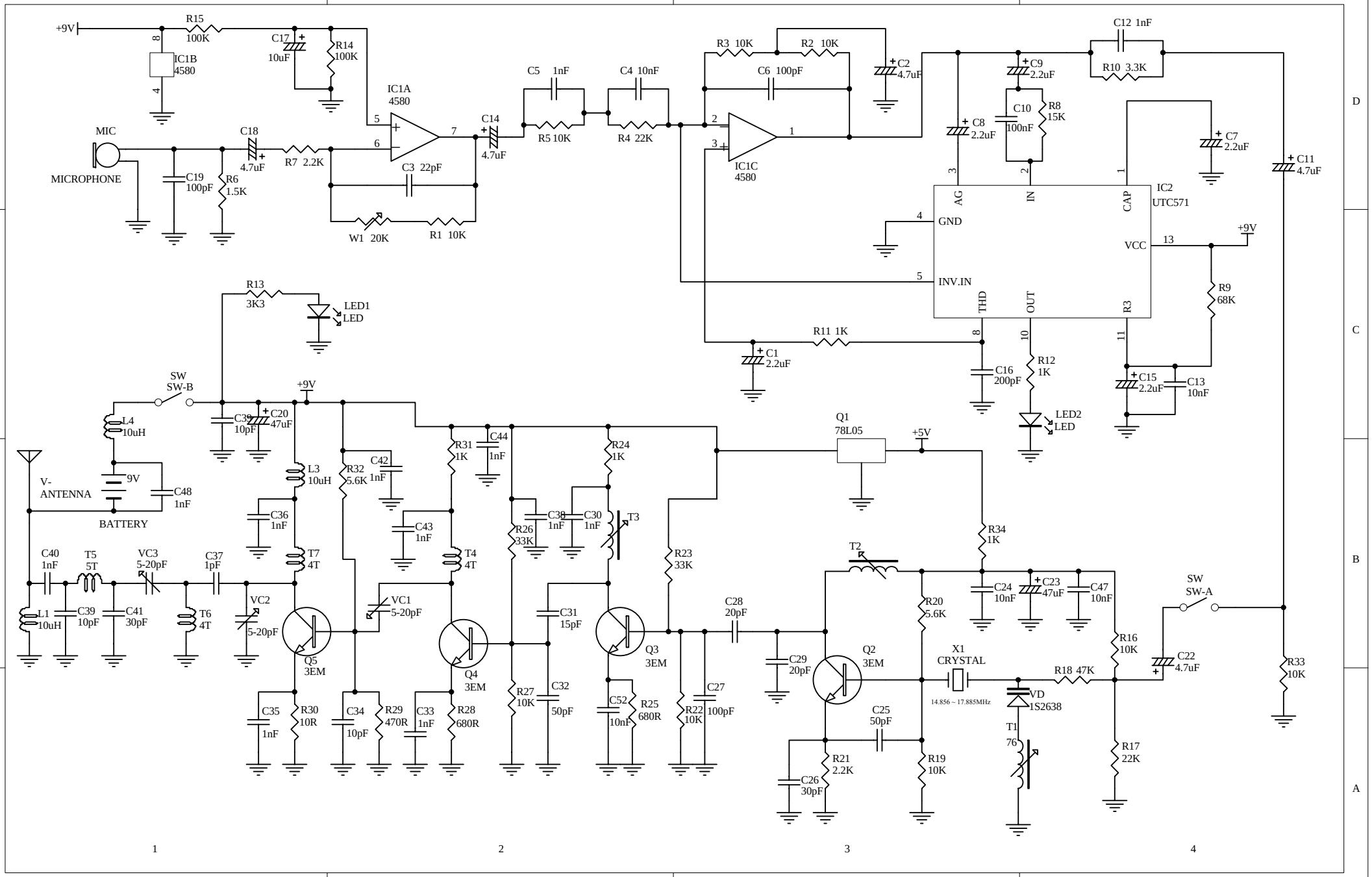
+9V
R15 100K
C17 10uF
R14 100K
IC1B 4580
IC1A 4580
MIC
MICROPHONE
C18 4.7uF
R7 2.2K
C19 100pF
R6 1.5K
C3 22pF
W1 20K
R1 10K
C14 4.7uF
C5 1nF
R5 10K
C4 10nF
R4 22K
R3 10K
R2 10K
C6 100pF
IC1C 4580
C2 4.7uF
C12 1nF
R10 3.3K
C9 2.2uF
C10 100nF
R8 15K
C8 2.2uF
C7 2.2uF
C11 4.7uF
IC2 UTC571
AG
IN
CAP
GND
VCC
INV.IN
THD
OUT
R3
R9 68K
R11 1K
C1 2.2uF
C16 200pF
R12 1K
C15 2.2uF
C13 10nF
LED2 LED
R13 3K3
LED1 LED
SW SW-B
L4 10uH
C39 10pF
C20 47uF
9V
BATTERY
C48 1nF
V- ANTENNA
L3 10uH
R32 5.6K
C42 1nF
R31 1K
C44 1nF
R24 1K
Q1 78L05
+5V
C36 1nF
C43 1nF
R26 33K
C38 1nF
C30 1nF
T3
R23 33K
R34 1K
C40 1nF
T5 5T
VC3 5-20pF
C37 1pF
T7 4T
T4 4T
T2
C24 10nF
C23 47uF
C47 10nF
SW SW-A
L1 10uH
C39 10pF
C41 30pF
T6 4T
VC2 5-20pF
VC1 5-20pF
C31 15pF
C28 20pF
R20 5.6K
R16 10K
C22 4.7uF
Q5 3EM
Q4 3EM
Q3 3EM
Q2 3EM
C29 20pF
X1 CRYSTAL
14.856 ~ 17.885MHz
R18 47K
R33 10K
C35 1nF
R30 10R
C34 10pF
R29 470R
C33 1nF
R28 680R
R27 10K
C32 50pF
C52 10nF
R25 680R
R22 10K
C27 100pF
C25 50pF
VD 1S2638
T1 76
R17 22K
R21 2.2K
R19 10K
C26 30pF