REVISION RECORD			
LTR	ECO NO:	APPROVED:	DATE:

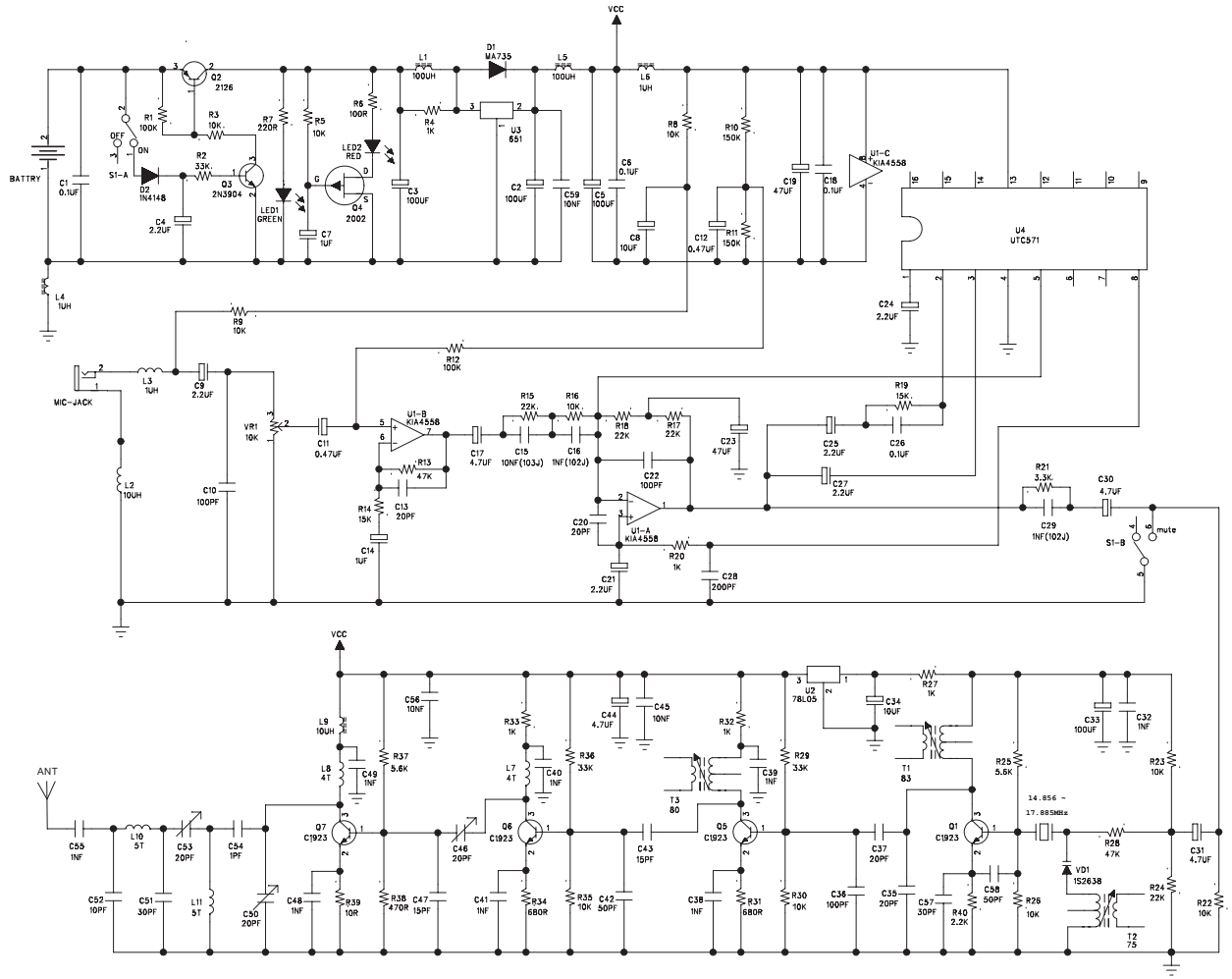

DRAWN:	DATED:	COMPANY:		
CHECKED:	DATED:	TITLE: VB-2 TX		
QUALITY CONTROL:	DATED:	CODE:	SIZE:	DRAWING NO: / REV: 01
RELEASED:	DATED:	SCALE:	SHEET: OF	