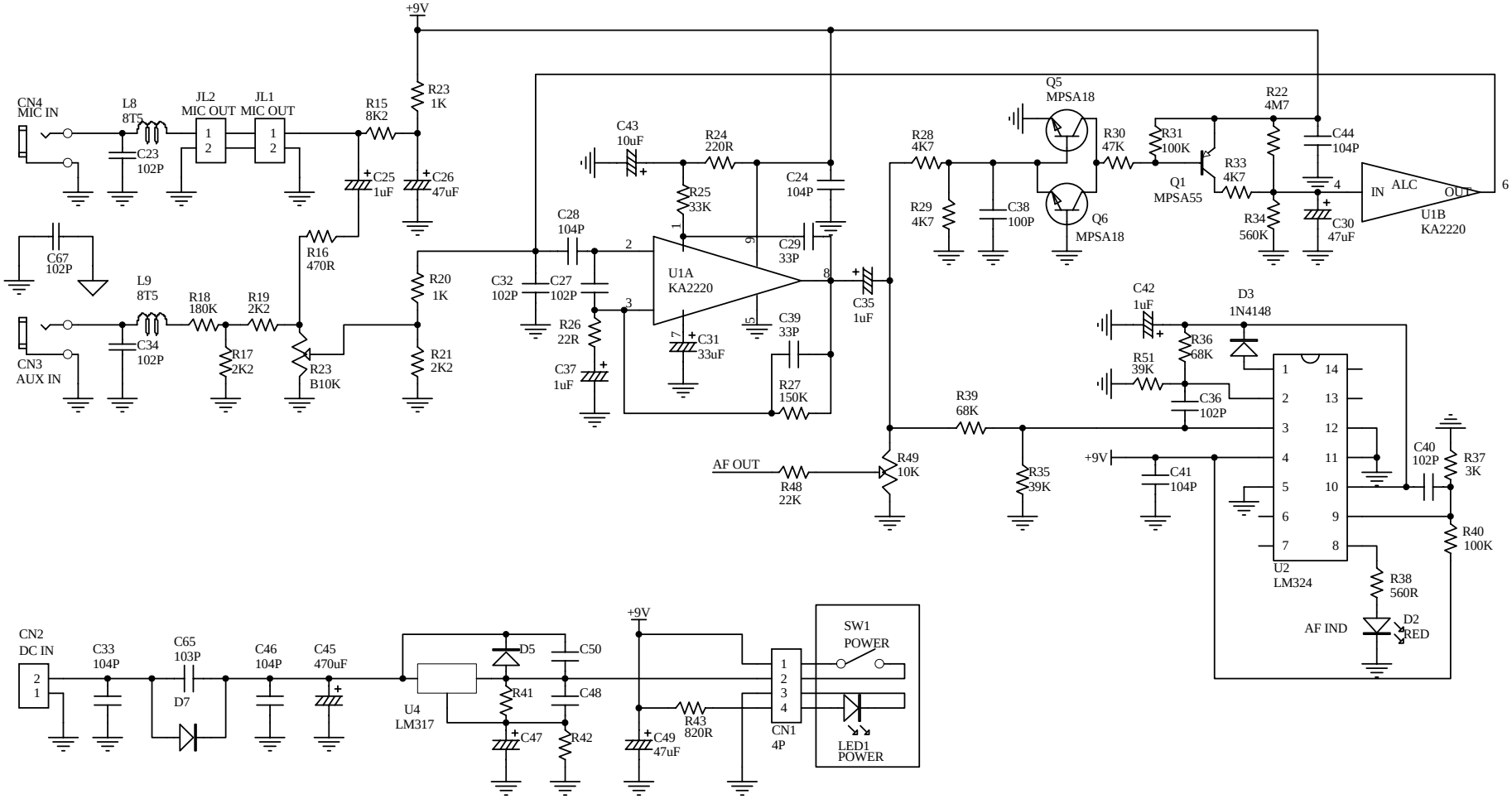

型号	HAS-400T-AF	版本	REV:01
客户	UWTECH	页码	1/2 A4
设计		日期	2010.7.15

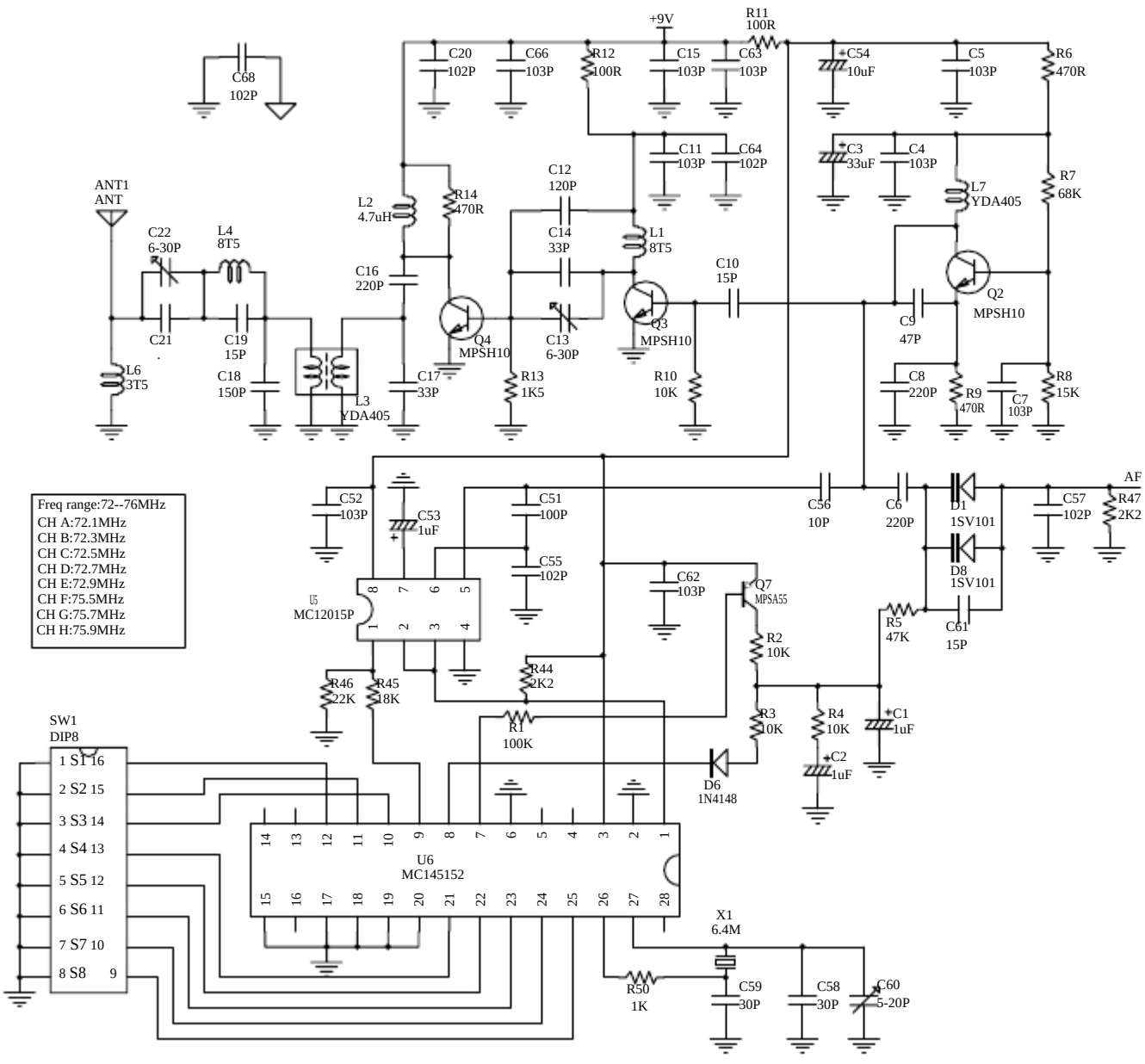

Freq range:72--76MHz
CH A:72.1MHz
CH B:72.3MHz
CH C:72.5MHz
CH D:72.7MHz
CH E:72.9MHz
CH F:75.5MHz
CH G:75.7MHz
CH H:75.9MHz

CH	A	B	C	D	E	F	G	H
Freq MHz	72.1	72.3	72.5	72.7	72.9	75.5	75.7	75.9
S1	ON	ON	ON	ON	ON	OFF	OFF	OFF
S2	OFF	OFF	OFF	OFF	OFF	OFF	OFF	OFF
S3	ON	ON	ON	ON	ON	ON	ON	ON
S4	OFF	OFF	OFF	OFF	OFF	OFF	OFF	OFF
S5	ON	OFF	ON	OFF	ON	OFF	ON	OFF
S6	ON	ON	ON	ON	ON	ON	ON	ON
S7	ON	ON	OFF	OFF	ON	ON	OFF	OFF
S8	ON	ON	ON	ON	OFF	ON	ON	ON

型号	HAS-400T	版本	REV:01
客户	UWTECH	页码	2/2 A4
设计		日期	2010.7.15