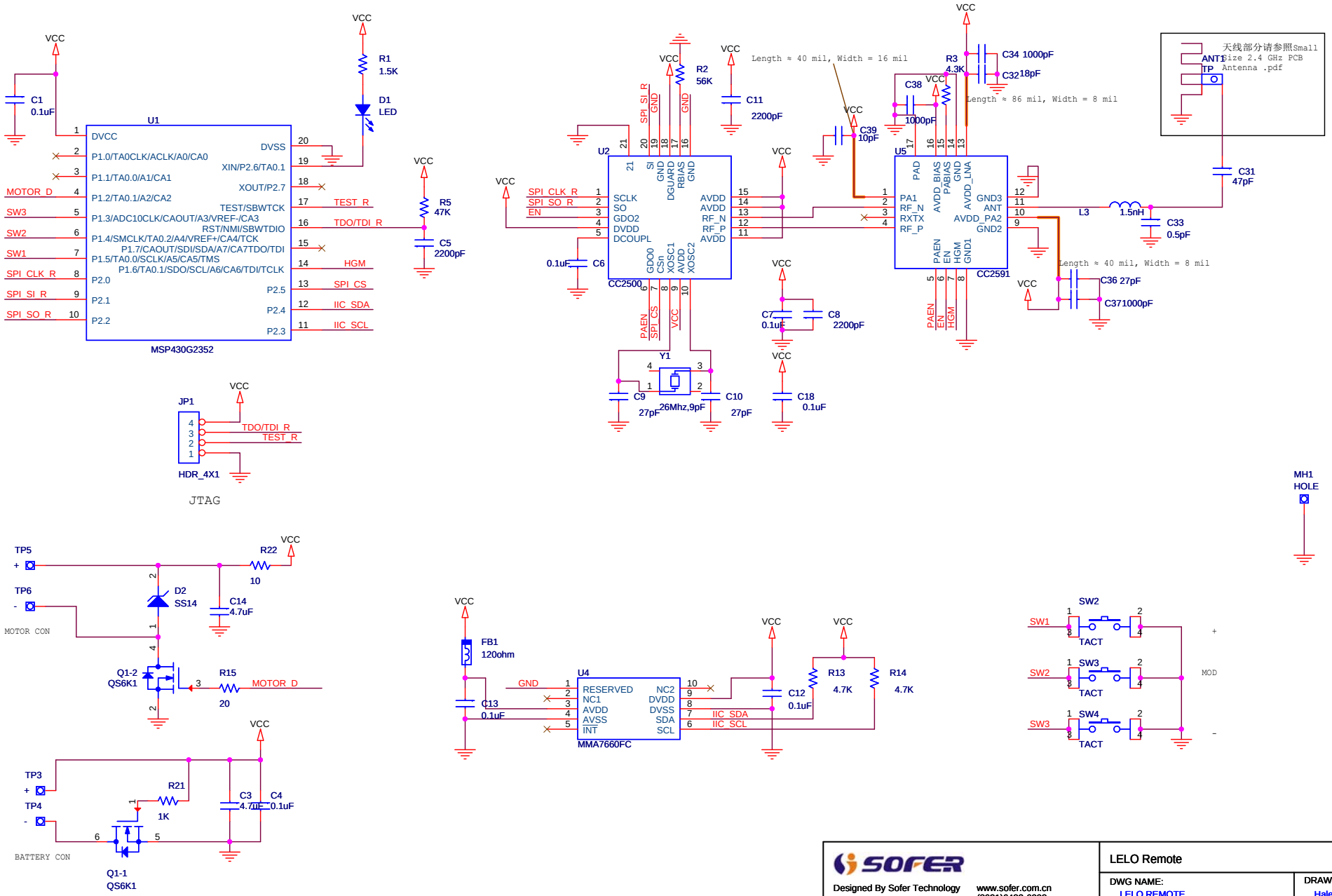

Designed By Sofer Technology

www.sofer.com.cn
(8621)6482-6908
16B,Building 5,Lane 251
Caoxi Rd,Shanghai,China

LELO Remote		
DWG NAME: LELO REMOTE	DRAWN BY: Haley Yuan	REV: 2.0
SIZE: B	DATE: Friday, November 25, 2011	SHEET: 1 of 1