尺寸序号

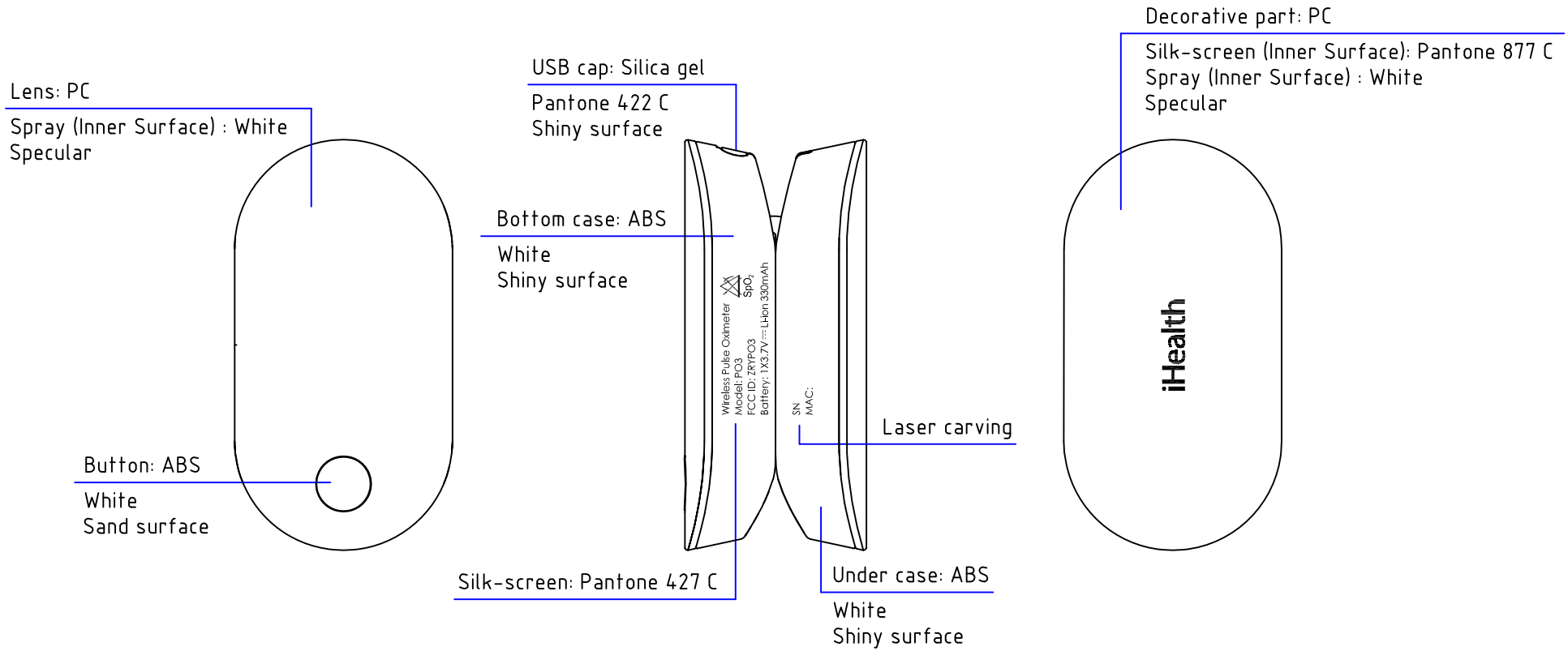

3				Signature	Date	Tolerance		Pro material		Model NO.	iAP03	
2			Design			.X		Surf dispose		Part name	英文外观图	
1			Checkup			.XX		Scale	1:1	Drawing NO.	iAP03-F02	
No.	更 改 记 录	更改时间	Approve			.X°		Units	mm		Edition	V1.0