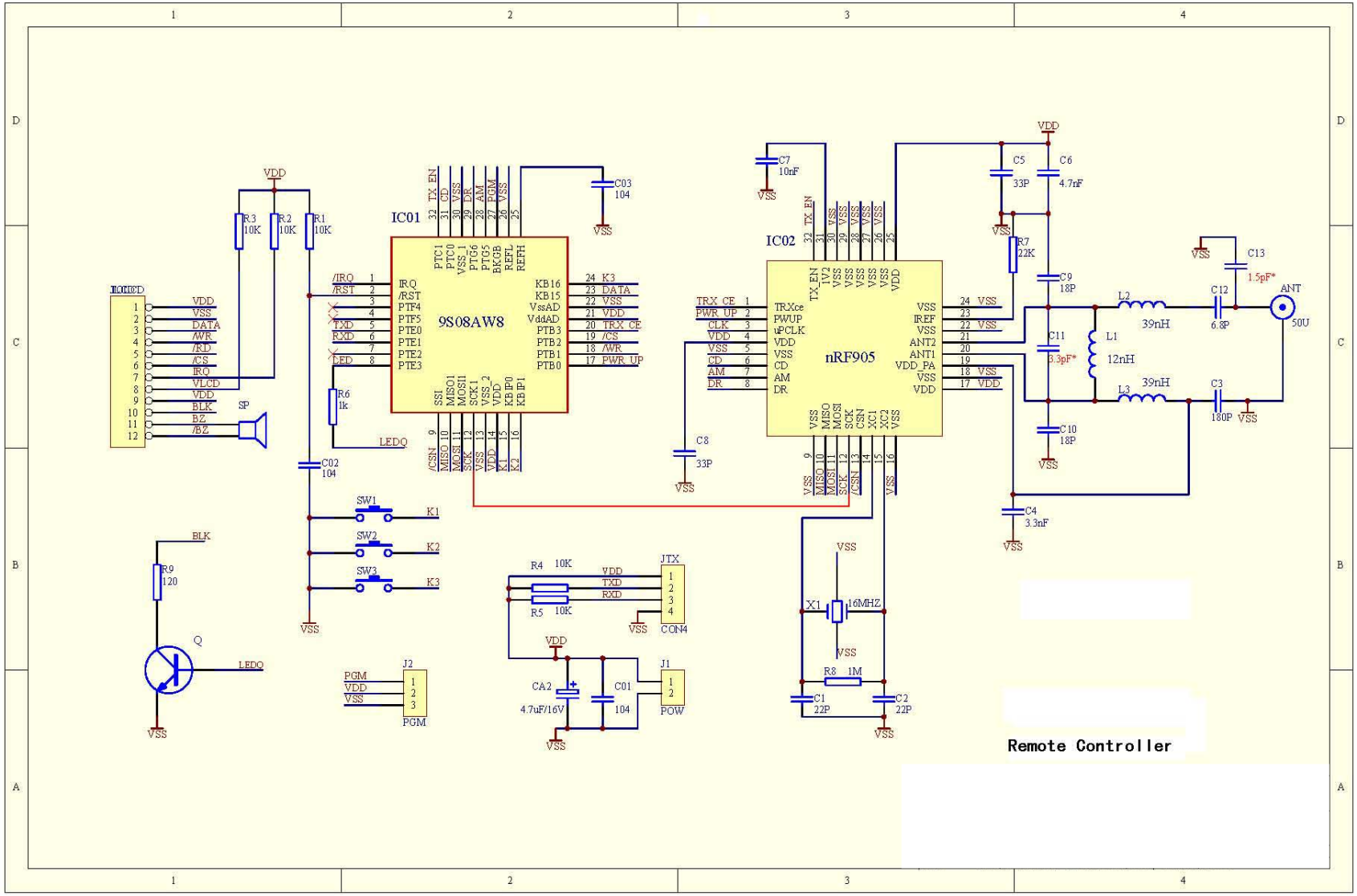
IC01
9S08AW8
IC02
nRF905
LCD
SP
SW1
SW2
SW3
K1
K2
K3
LEDQ
BLK
Q
R9 120
R1 10K
R2 10K
R3 10K
R6 1k
C02 104
C03 104
R4 10K
R5 10K
JTX
CON4
J2
PGM
CA2 4.7uF/16V
C01 104
J1
POW
X1 16MHZ
R8 1M
C1 22P
C2 22P
C7 10nF
C8 33P
C5 33P
C6 4.7nF
R7 22K
C9 18P
C11 3.3pF*
C10 18P
C4 3.3nF
L1 12nH
L2 39nH
L3 39nH
C12 6.8P
C13 1.5pF*
C3 180P
ANT
50U
VDD
VSS
Remote Controller