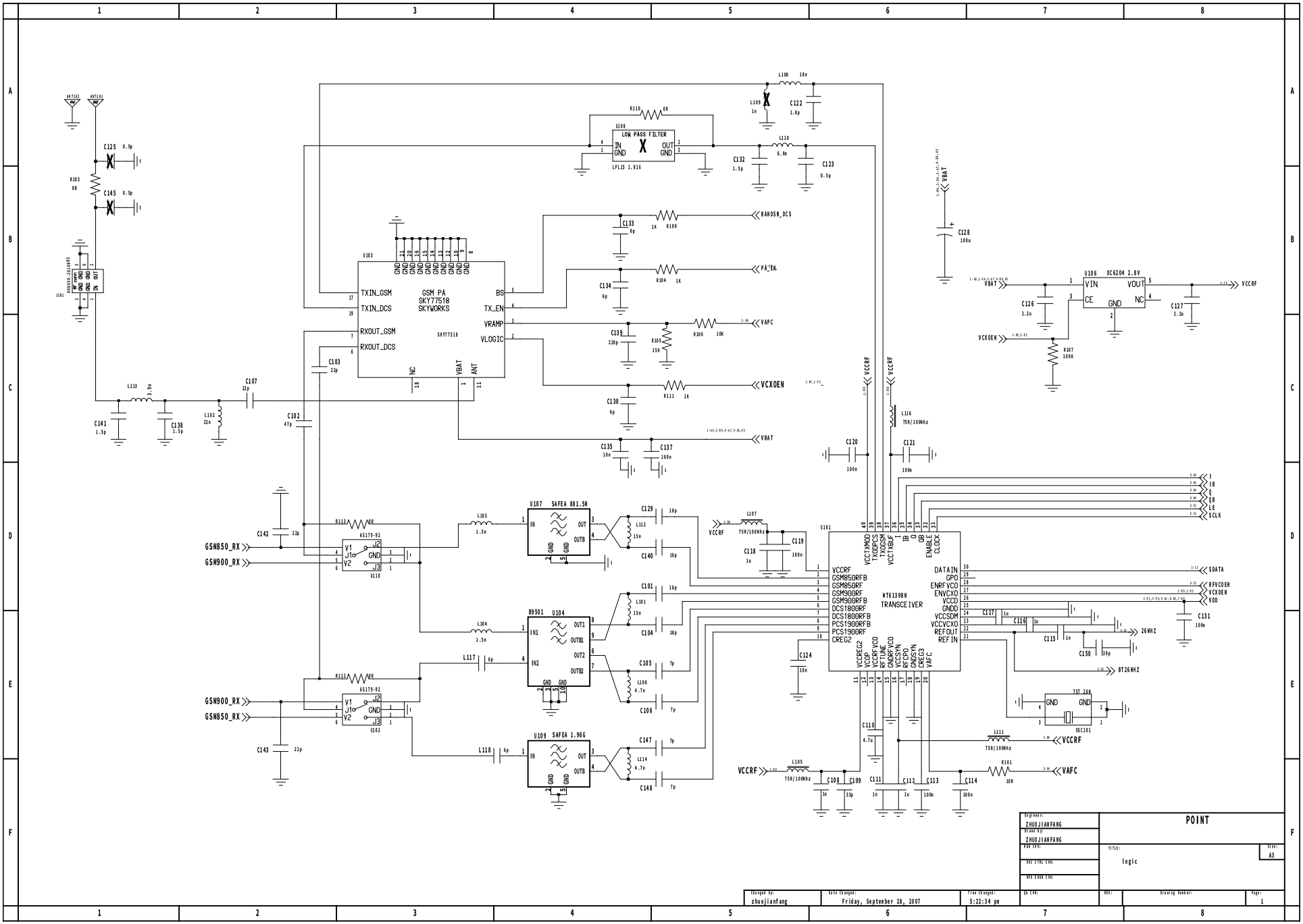
LOW PASS FILTER
LFL15 1.816
GSM PA
SKY77518
SKYWORKS
TXIN_GSM
TXIN_DCS
RXOUT_GSM
RXOUT_DCS
BS
TX_EN
VRAMP
VLOGIC
NC
VBAT
ANT
BAND5N_DCS
PA_EN
VAPC
VCXOEN
VBAT
XC6204 2.8V
VIN
VOUT
CE
GND
NC
VCCRF
VCXOEN
SAFEA 881.5W
SAFEA 1.96G
AS179-92
GSM850_RX
GSM900_RX
GSM900_RX
GSM850_RX
MT6139BN
TRANSCEIVER
VCCRF
GSM850RFB
GSM850RF
GSM900RF
GSM900RFB
DCS1800RF
DCS1800RFB
PCS1900RFB
PCS1900RF
CREG2
DATAIN
GPO
ENRFVCO
ENVCXO
VCCD
GNDD
VCCSDM
VCCVCXO
REFOUT
REFIN
SDATA
RFVCOEN
VCXOEN
VDD
26MHZ
BT26MHZ
VAFC
TST 16M
OSC101
Engineer: ZHUOJIANFANG
Drawn by: ZHUOJIANFANG
POINT
TITLE: logic
Size: A3
Changed by: zhuojianfang
Date Changed: Friday, September 28, 2007
Time Changed: 5:22:34 pm
Page: 1
POINT - Proprietary

MT6223_ABD

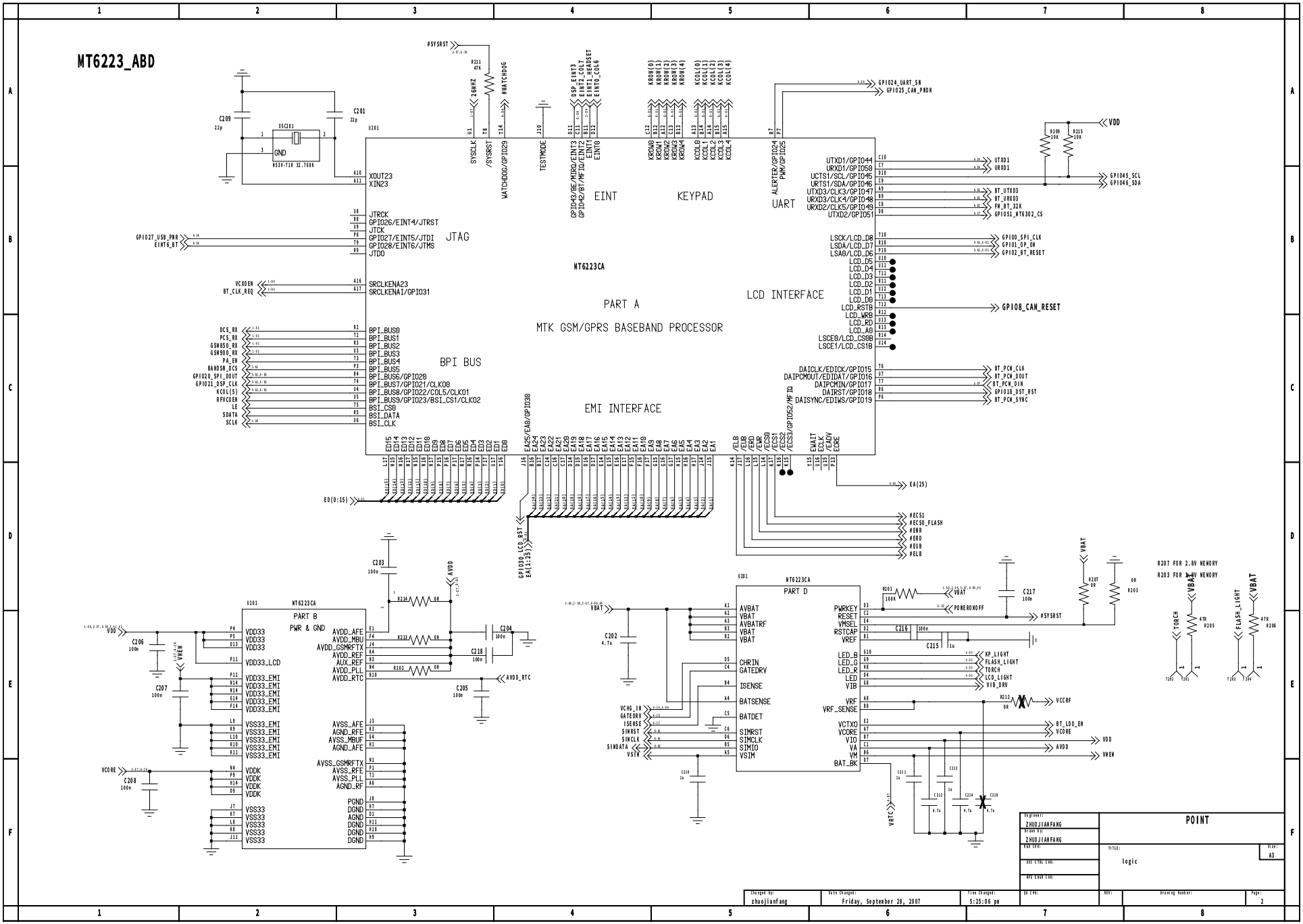
U101
MT6223CA
PART A
MTK GSM/GPRS BASEBAND PROCESSOR
JTAG
EINT
KEYPAD
UART
LCD INTERFACE
BPI BUS
EMI INTERFACE
PART B
PWR & GND
PART D
XOUT23
XIN23
JTRCK
GPIO26/EINT4/JTRST
JTCK
GPIO27/EINT5/JTDI
GPIO28/EINT6/JTMS
JTDO
SRCLKENA23
SRCLKENAI/GPIO31
BPI_BUS0
BPI_BUS1
BPI_BUS2
BPI_BUS3
BPI_BUS4
BPI_BUS5
BPI_BUS6/GPIO20
BPI_BUS7/GPIO21/CLK00
BPI_BUS8/GPIO22/COL5/CLK01
BPI_BUS9/GPIO23/BSI_CS1/CLK02
BSI_CS0
BSI_DATA
BSI_CLK
GPIO24_UART_SW
GPIO25_CAN_PRDN
UTXD1/GPIO44
URXD1/GPIO50
UCTS1/SCL/GPIO45
URTS1/SDA/GPIO46
UTXD3/CLK3/GPIO47
URXD3/CLK4/GPIO48
URXD2/CLK5/GPIO49
UTXD2/GPIO51
LSCK/LCD_D8
LSDA/LCD_D7
LSA0/LCD_D6
LCD_D5
LCD_D4
LCD_D3
LCD_D2
LCD_D1
LCD_D0
LCD_RSTB
LCD_WRB
LCD_RD
LCD_A0
LSCE0/LCD_CS0B
LSCE1/LCD_CS1B
DAICLK/EDICK/GPIO15
DAIPCMOUT/EDIDAT/GPIO16
DAIPCMIN/GPIO17
DAIRST/GPIO18
DAISYNC/EDIWS/GPIO19
GPIO27_USB_PRD
EINT6_BT
VCXOEN
BT_CLK_REQ
DCS_RX
PCS_RX
GSM850_RX
GSM900_RX
PA_EN
BANDSW_DCS
GPIO20_SPI_DOUT
GPIO21_DSP_CLK
KCOL(5)
RFVCOEN
LE
SDATA
SCLK
ED(0:15)
EA(25)
GPIO30_LCD_RST
EA(1:25)
#ECS1
#ECS0_FLASH
#ENR
#ERD
#EUB
#ELB
#SYSRST
VDD
VBAT
VCORE
AVDD
AVDD_RTC
VCCRF
VMEM
BT_LDO_EN
PONERONOFF
KP_LIGHT
FLASH_LIGHT
TORCH
LCD_LIGHT
VIB_DRV
R207 FOR 2.8V MEMORY
R203 FOR 3.0V MEMORY
POINT
Engineer: ZHUOJIANFANG
Drawn by: ZHUOJIANFANG
TITLE: logic
Size: A3
Changed by: zhuojianfang
Date Changed: Friday, September 28, 2007
Time Changed: 5:25:06 pm
Page: 2
POINT - Proprietary

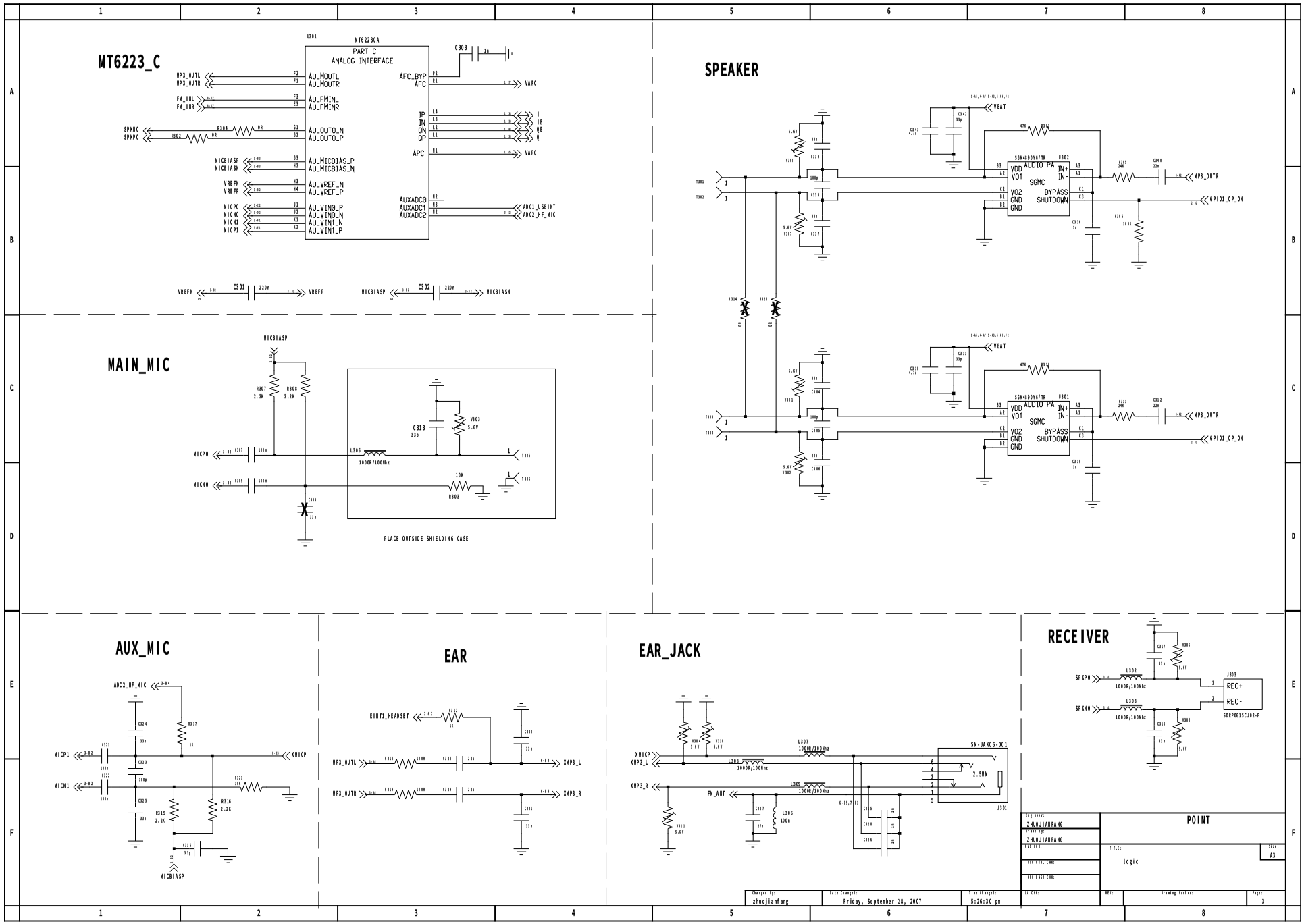
MT6223_C
U201
MT6223CA
PART C
ANALOG INTERFACE
MP3_OUTL
MP3_OUTR
FM_INL
FM_INR
SPKNO
SPKPO
MICBIASP
MICBIASN
VREFN
VREFP
MICPO
MICNO
MICN1
MICP1
AU_MOUTL
AU_MOUTR
AU_FMINL
AU_FMINR
AU_OUTO_N
AU_OUTO_P
AU_MICBIAS_P
AU_MICBIAS_N
AU_VREF_N
AU_VREF_P
AU_VIN0_P
AU_VIN0_N
AU_VIN1_N
AU_VIN1_P
AFC_BYP
AFC
IP
IN
QN
QP
APC
AUXADC0
AUXADC1
AUXADC2
VAFC
VAPC
ADC1_USBINT
ADC2_HF_MIC
C308
C301
C302
SPEAKER
VBAT
SGM4800YG/TR
AUDIO PA
SGMC
VDD
VO1
VO2
GND
IN+
IN-
BYPASS
SHUTDOWN
U302
U301
GPIO1_OP_ON
MAIN_MIC
R307
R308
2.2K
C313
33p
VD03
5.6V
L305
1000R/100Mhz
10K
R303
PLACE OUTSIDE SHIELDING CASE
AUX_MIC
ADC2_HF_MIC
XMICP
XMICN1
R315
R316
EAR
EINT1_HEADSET
XMP3_L
XMP3_R
EAR_JACK
XMICP
XMP3_L
XMP3_R
FM_ANT
L307
L308
L309
L306
100n
SW-JAK06-001
2.5MM
J301
RECEIVER
SPKPO
SPKNO
L302
L303
J303
REC+
REC-
SDRP0615CJD2-F
Engineer:
ZHUOJIANFANG
Drawn by:
ZHUOJIANFANG
POINT
TITLE:
logic
Size:
A3
Changed by:
zhuojianfang
Date Changed:
Friday, September 28, 2007
Time Changed:
5:26:30 pm
Page:
3
POINT - Proprietary

MOMERY

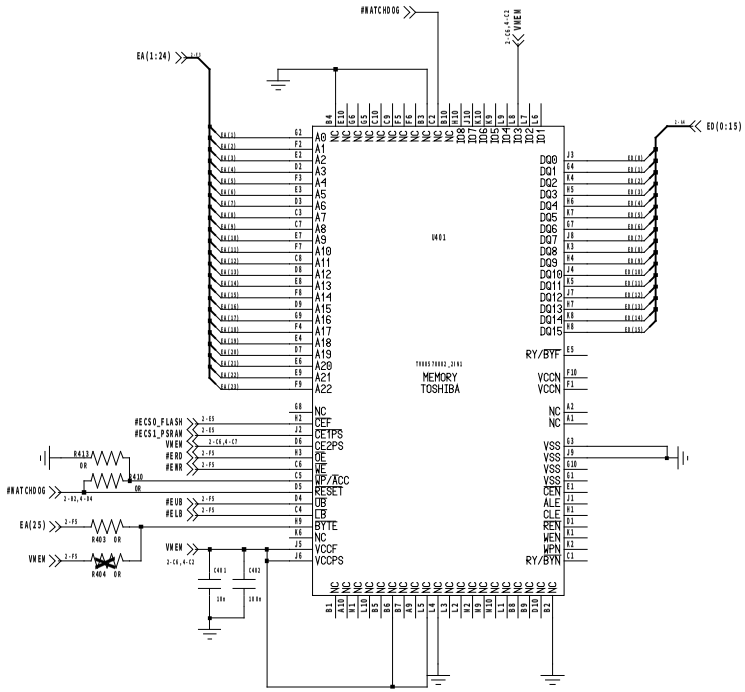

VBAT

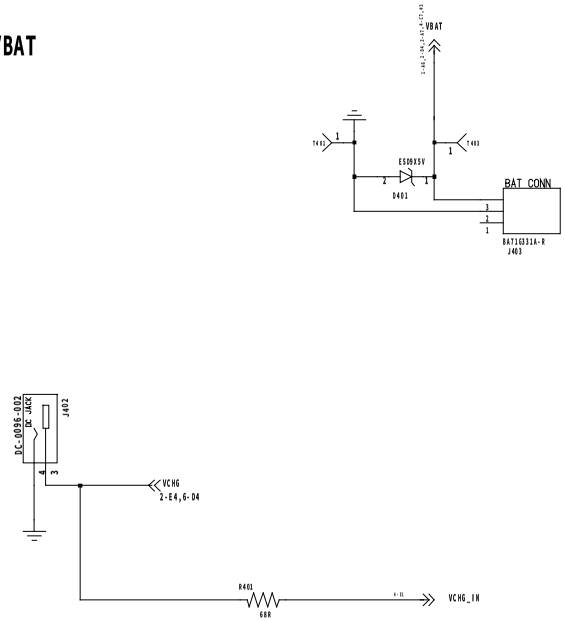

Engineer: ZHUOJIANFANG	POINT		
Drawn by: ZHUOJIANFANG			
BOM CHK:	TITLE: logic		Size: A3
DOC CTRL CHK:			
RFE CHK CHK:			
Changed by: zhuojianfang	Date Changed: Friday, September 28, 2007	Time Changed: 5:27:12 pm	QA CHK:
REV:	Drawing Number:	Page: 4	

POINT - Proprietary

LCM

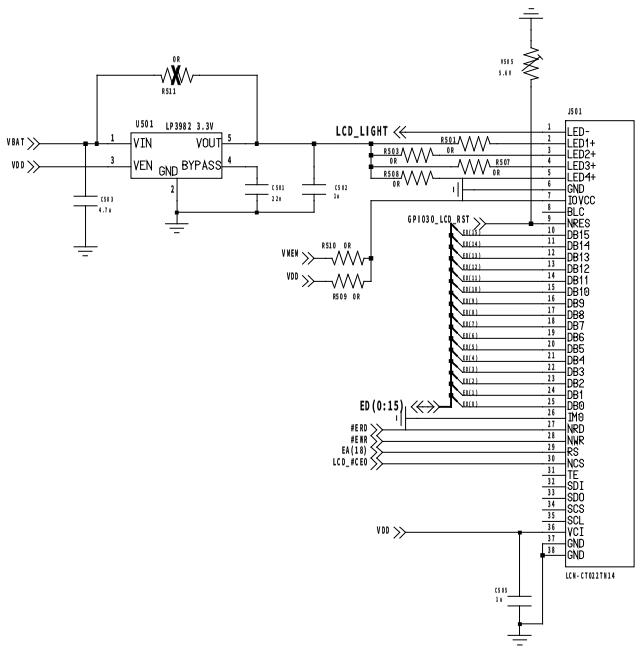

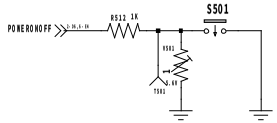

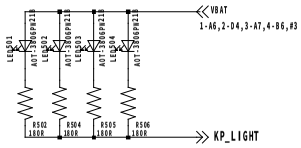

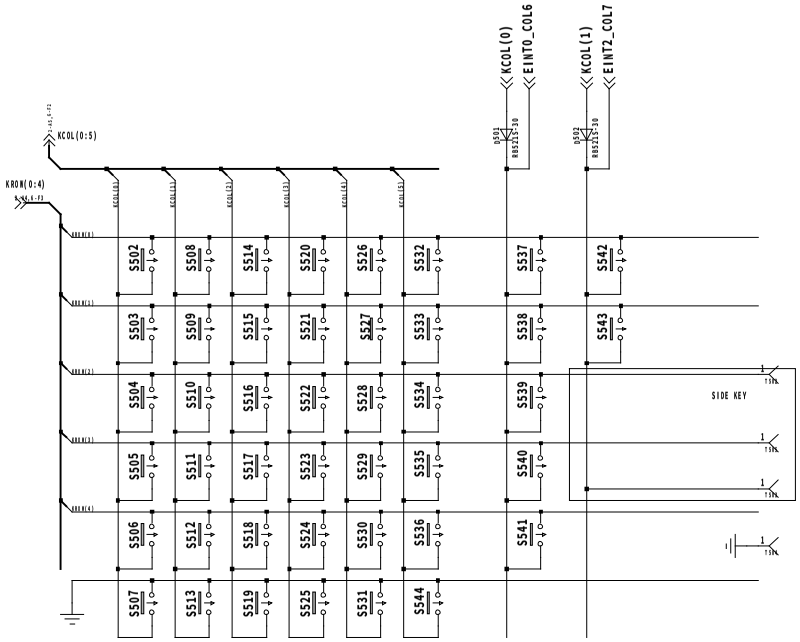

Engineer: ZHUOJIANFANG	POINT
Drawn by: ZHUOJIANFANG	
BOM CHK:	TITLE: logic
DOC CTRL CHK:	Size: A3
RFE ENGR CHK:	

Changed by:	Date Changed:	Time Changed:	QA CHK:	REV:	Drawing Number:	Page:
zhuojianfang	Friday, September 28, 2007	5:28:02 pm				5

POINT - Proprietary

SIM

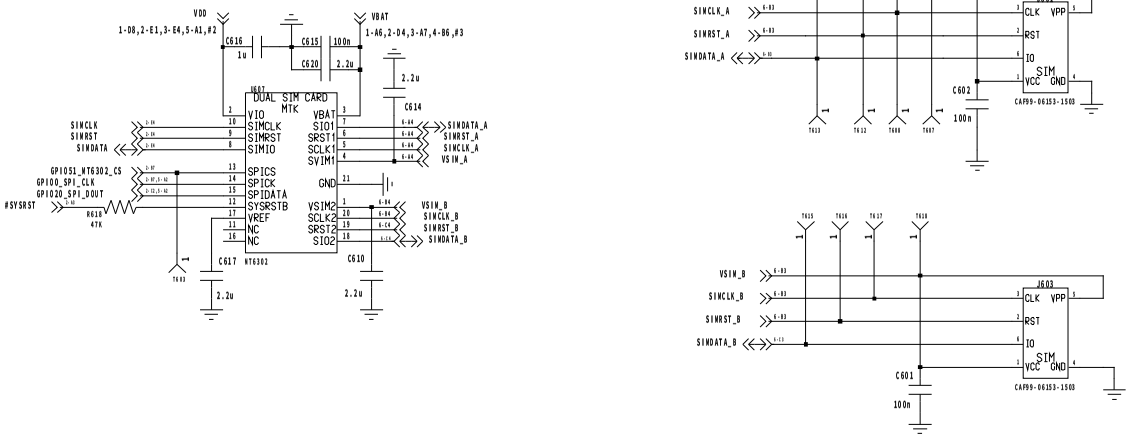

T-CARD

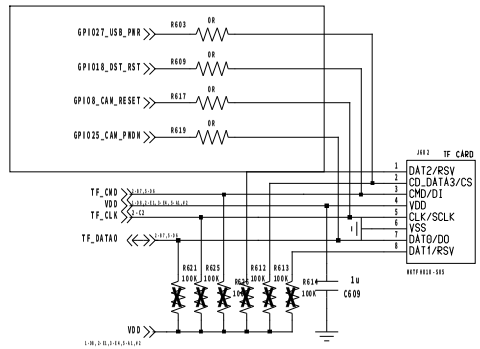

MiniUSB

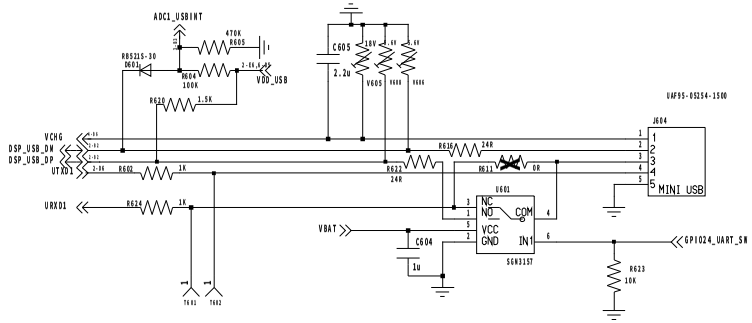

Vibrator

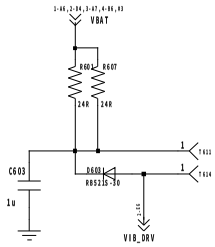

Engineer: ZHUOJIANFANG					POINT		
Drawn by: ZHUOJIANFANG							
Rev Ctrl:					TITLE: logic		Size: A3
Doc Ctrl Ctrl:							
Pro Ctrl Ctrl:							
Changed by: zhuojianfang	Date Changed: Friday, September 28, 2007	Time Changed: 5:28:59 pm	Ex Ctrl:	REV:	Drawing Number:		Page: 6

POINT - Proprietary

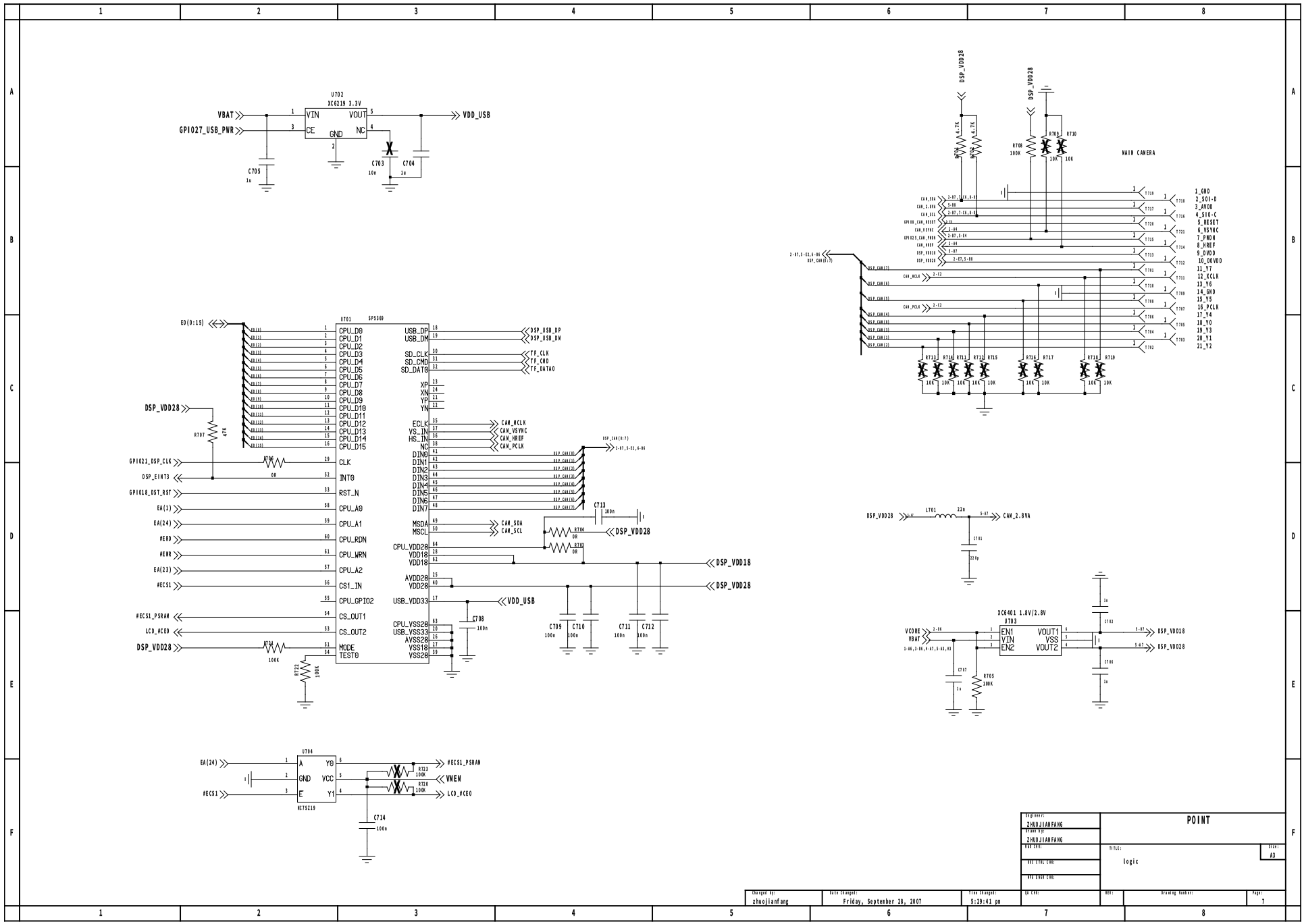

Engineer: ZHUOJIANFANG	POINT						
Drawn by: ZHUOJIANFANG							
BOM CHG:	TITLE: logic						Size: A3
DOC CTRL CHG:							
APS CHGE CHG:							
Changed by: zhuojianfang	Date Changed: Friday, September 28, 2007	Time Changed: 5:29:41 pm	EA CHG:	REV:	Drawing Number:		Page: 7

POINT - Proprietary

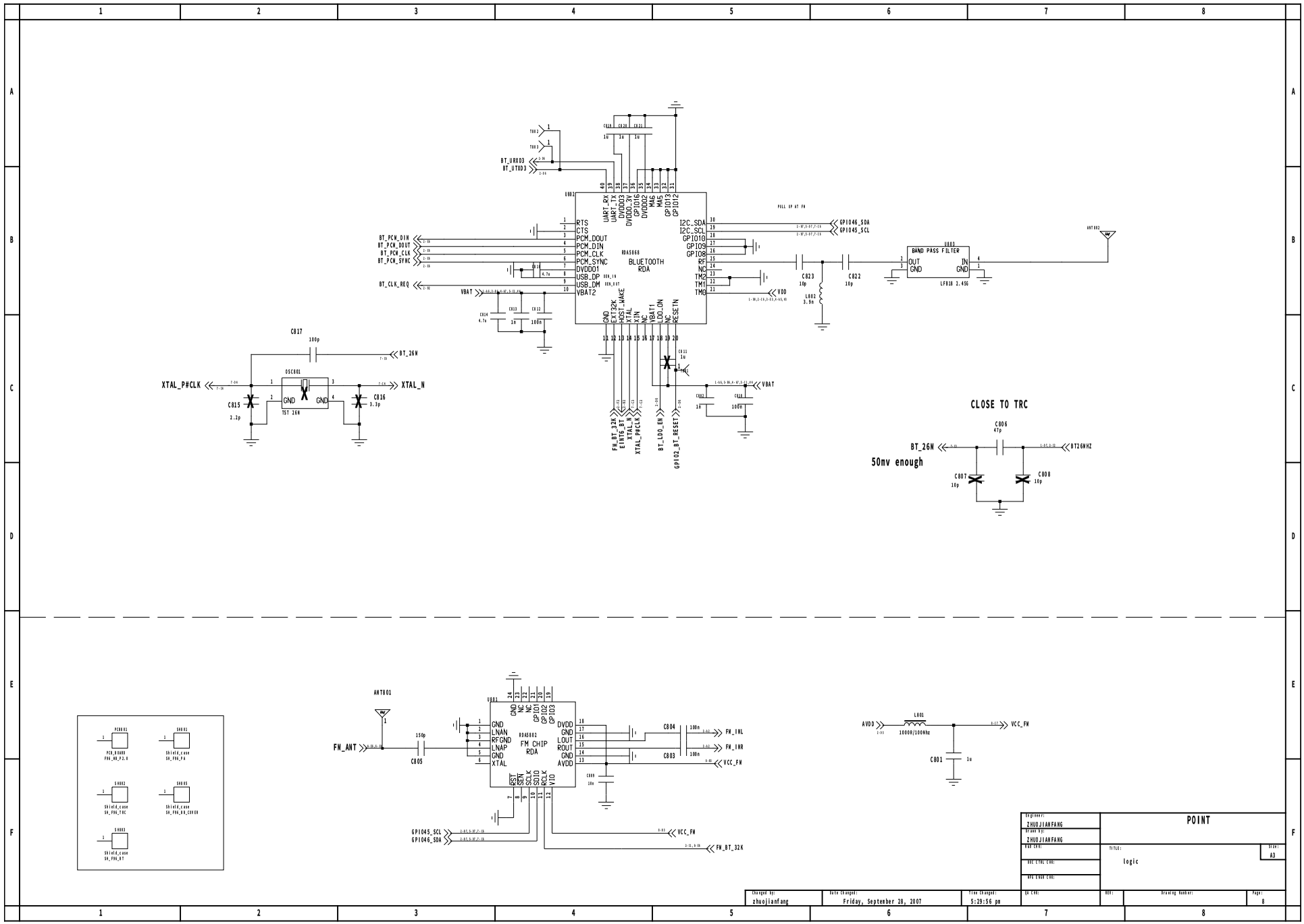

Engineer: ZHUOJIANFANG	POINT		
Drawn by: ZHUOJIANFANG			
BOM CHK:	TITLE: logic		Size: A3
DOC CTRL CHK:			
RFE ENGR CHK:			
Changed by: zhuojianfang	Date Changed: Friday, September 28, 2007	Time Changed: 5:29:56 pm	EX CHK:
REV:	Drawing Number:	Page: 8	

POINT - Proprietary