PCTEST ENGINEERING LABORATORY, INC.
7185 Oakland Mills Road, Columbia, MD 21046 USA
Tel. 410.290.6652 / Fax 410.290.6654
http://www.pctest.com

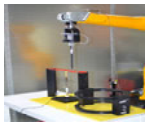

HEARING AID COMPATIBILITY

Applicant Name:
LG Electronics U.S.A, Inc.
1000 Sylvan Avenue
Englewood Cliffs, NJ 07632
United States

Date of Testing:
08/26/2019 - 09/16/2019
Test Site/Location:
PCTEST Lab, Columbia, MD, USA
Test Report Serial No.:
1M1908190143-12-R1.ZNF
Date of Issue:
09/23/2019

FCC ID:	**ZNFG850UM**
APPLICANT:	**LG ELECTRONICS U.S.A, INC.**

Scope of Test:	RF Emissions Testing
Application Type:	Class II Permissive Change
FCC Rule Part(s):	CFR §20.19(b)
HAC Standard:	ANSI C63.19-2011 285076 D01 HAC Guidance v05 285076 D02 T-Coil testing for CMRS IP v03
DUT Type:	Portable Handset
Model:	LM-G850UM
Additional Model(s):	LM-G850V, LM-G850QM, LM-G850QM6, LMG850UM, LMG850V, LMG850QM, LMG850QM6, G850UM, G850V, G850QM, G850QM6, LM-G850UM2, LM-G850UM2X, LMG850UM2, LMG850UM2X, G850UM2, G850UM2X
Test Device Serial No.:	*Pre-Production Sample* [S/N: 03364]
Class II Permissive Change(s):	See FCC Change Document

C63.19-2011 HAC Category:	**M4 (RF EMISSIONS CATEGORY)**

Note: This revised Test Report (S/N: 1M1908190143-12-R1.ZNF) supersedes and replaces the previously issued test report on the same subject device for the same type of testing as indicated. Please discard or destroy the previously issued test report(s) and dispose of it accordingly.

This wireless portable device has been shown to be hearing-aid compatible under the above rated category, specified in ANSI/IEEE Std. C63.19-2011 and has been tested in accordance with the specified measurement procedures. Hearing-Aid Compatibility is based on the assumption that all production units will be designed electrically identical to the device tested in this report. Test results reported herein relate only to the item(s) tested. North America bands only.

I attest to the accuracy of data. All measurements reported herein were performed by me or were made under my supervision and are correct to the best of my knowledge and belief. I assume full responsibility for the completeness of these measurements and vouch for the qualifications of all persons taking them.

Randy Ortanez
President

ACCREDITED
TESTING CERT#2041.01

© 2019 PCTEST Engineering Laboratory, Inc.

© 2019 PCTEST Engineering Laboratory, Inc. All rights reserved. Unless otherwise specified, no part of this report may be reproduced or utilized in any part, form or by any means, electronic or mechanical, including photocopying and microfilm, without permission in writing from PCTEST Engineering Laboratory, Inc. If you have any questions about this international copyright or have an enquiry about obtaining additional rights to this report or assembly of contents thereof, please contact INFO@PCTEST.COM.

TABLE OF CONTENTS

1. INTRODUCTION 3
2. DUT DESCRIPTION 4
3. ANSI/IEEE C63.19 PERFORMANCE CATEGORIES 6
4. SYSTEM SPECIFICATIONS 7
5. TEST PROCEDURE 12
6. SYSTEM CHECK 14
7. MODULATION INTERFERENCE FACTOR 17
8. RF CONDUCTED POWER MEASUREMENTS 25
9. JUSTIFICATION OF HELD TO EAR MODES TESTED 58
10. LTE TDD UPLINK-DOWNLINK CONFIGURATION 60
11. OVERALL MEASUREMENT SUMMARY 62
12. EQUIPMENT LIST 65
13. MEASUREMENT UNCERTAINTY 66
14. TEST DATA 67
15. CALIBRATION CERTIFICATES 80
16. CONCLUSION 111
17. REFERENCES 112
18. TEST PHOTOGRAPHS 114

© 2019 PCTEST Engineering Laboratory, Inc. All rights reserved. Unless otherwise specified, no part of this report may be reproduced or utilized in any part, form or by any means, electronic or mechanical, including photocopying and microfilm, without permission in writing from PCTEST Engineering Laboratory, Inc. If you have any questions about this international copyright or have an enquiry about obtaining additional rights to this report or assembly of contents thereof, please contact INFO@PCTEST.COM.

1. INTRODUCTION

On July 10, 2003, the Federal Communications Commission (FCC) adopted new rules requiring wireless manufacturers and service providers to provide digital wireless phones that are compatible with hearing aids. The FCC has modified the exemption for wireless phones under the Hearing Aid Compatibility Act of 1998 (HAC Act) in WT Docket 01-309 RM-8658[1] to extend the benefits of wireless telecommunications to individuals with hearing disabilities. These benefits encompass business, social and emergency communications, which increase the value of the wireless network for everyone. An estimated more than 10% of the population in the United States show signs of hearing impairment and of that fraction, almost 80% use hearing aids. Approximately 500 million people worldwide suffer from hearing loss.

Compatibility Tests Involved:

The standard calls for wireless communications devices to be measured for:

- RF Electric-field emissions
- T-coil mode, magnetic-signal strength in the audio band
- T-coil mode, magnetic-signal frequency response through the audio band
- T-coil mode, magnetic-signal and noise articulation index

The hearing aid must be measured for:

- RF immunity in microphone mode
- RF immunity in T-coil mode

In the following tests and results, this report includes the evaluation for a wireless communications device.

Figure 1-1 Hearing Aid *in-vitu*

[1] FCC Rule & Order, WT Docket 01-309 RM-8658

© 2019 PCTEST Engineering Laboratory, Inc. All rights reserved. Unless otherwise specified, no part of this report may be reproduced or utilized in any part, form or by any means, electronic or mechanical, including photocopying and microfilm, without permission in writing from PCTEST Engineering Laboratory, Inc. If you have any questions about this international copyright or have an enquiry about obtaining additional rights to this report or assembly of contents thereof, please contact INFO@PCTEST.COM.

2. DUT DESCRIPTION

FCC ID:	ZNFG850UM
Manufacturer:	LG Electronics U.S.A, Inc. 1000 Sylvan Avenue Englewood Cliffs, NJ 07632 United States
Model:	LM-G850UM
Additional Model(s):	LM-G850V, LM-G850QM, LM-G850QM6, LMG850UM, LMG850V, LMG850QM, LMG850QM6, G850UM, G850V, G850QM, G850QM6, LM-G850UM2, LM-G850UM2X, LMG850UM2, LMG850UM2X, G850UM2, G850UM2X
Serial Number:	03364
Antenna Configurations:	Internal Antenna
DUT Type:	Portable Handset
Permissive Change(s):	See FCC Change Document

I. Power Reduction for WIFI

This device uses an independent fixed level power reduction mechanism for all WIFI operations during voice or VoIP held to ear scenarios. Reduced powers were used to evaluate for low-power exemption in Section 9.II for WIFI. Detailed descriptions of the power reduction mechanism are included in the operational description.

II. LTE Band Selection

This device supports the following pairs of LTE bands with similar frequencies: LTE B12 & B17, B25 & B2, and B66 & B4. These pairs of LTE bands have the same target powers and share the same transmission paths. Since the supported frequency span for the smaller LTE bands are completely covered by the larger LTE bands, only the larger LTE bands (LTE B12, B25 and B66) were evaluated for hearing-aid compliance.

III. Accessory Testing

This device has been additionally evaluated with the dual display accessory. Since this accessory has no additional transmitters, only the overall worst-case standalone configuration was evaluated.

© 2019 PCTEST Engineering Laboratory, Inc. All rights reserved. Unless otherwise specified, no part of this report may be reproduced or utilized in any part, form or by any means, electronic or mechanical, including photocopying and microfilm, without permission in writing from PCTEST Engineering Laboratory, Inc. If you have any questions about this international copyright or have an enquiry about obtaining additional rights to this report or assembly of contents thereof, please contact INFO@PCTEST.COM.

Table 2-1
ZNFG850UM HAC Air Interfaces

Air-Interface	Band (MHz)	Type Transport	HAC Tested	Simultaneous But Not Tested	Name of Voice Service
CDMA	835	VO	Yes	Yes: WIFI or BT	CMRS Voice
	1900				
	EvDO	VD	No[1]	Yes: WIFI or BT	Google Duo
GSM	850	VO	Yes	Yes: WIFI or BT	CMRS Voice
	1900				
	GPRS/EDGE	VD	No[1]	Yes: WIFI or BT	Google Duo
UMTS	850	VD	No[1]	Yes: WIFI or BT	CMRS Voice
	1700				
	1900				
	HSPA	VD	No[1]	Yes: WIFI or BT	Google Duo
LTE (FDD)	680 (B71)	VD	No[1 2]	Yes: WIFI or BT	VoLTE, Google Duo
	700 (B12)		No[1]		
	700 (B17)				
	780 (B13)				
	790 (B14)				
	850 (B5)				
	850 (B26)				
	1700 (B4)				
	1700 (B66)				
	1900 (B2)				
	1900 (B25)				
	2300 (B30)				
	2500 (B7)				
LTE (TDD)	2600 (B41)	VD	Yes	Yes: WIFI or BT	VoLTE, Google Duo
	3600 (B48)				
WIFI	2450	VD	No[1]	Yes: CDMA, GSM, UMTS, or LTE	VoWIFI, Google Duo
	5200 (U-NII 1)				
	5300 (U-NII 2A)				
	5500 (U-NII 2C)				
	5800 (U-NII 3)				
BT	2450	DT	No	Yes: CDMA, GSM, UMTS, or LTE	N/A

Type Transport
VO = Voice Only
DT = Digital Data - Not intended for Voice Services
VD = CMRS and/or IP Voice over Data Transport

Notes:
1. Evaluated for MIF and low-power exemption.
2. LTE B71, while outside the scope of ANSI C63.19 and FCC HAC regulations, was additionally tested according to the existing HAC procedures with currently available test equipment.

© 2019 PCTEST Engineering Laboratory, Inc. All rights reserved. Unless otherwise specified, no part of this report may be reproduced or utilized in any part, form or by any means, electronic or mechanical, including photocopying and microfilm, without permission in writing from PCTEST Engineering Laboratory, Inc. If you have any questions about this international copyright or have an enquiry about obtaining additional rights to this report or assembly of contents thereof, please contact INFO@PCTEST.COM.

3. ANSI/IEEE C63.19 PERFORMANCE CATEGORIES

I. RF EMISSIONS

The ANSI Standard presents performance requirements for acceptable interoperability of hearing aids with wireless communications devices. When these parameters are met, a hearing aid operates acceptably in close proximity to a wireless communications device.

Category	Telephone RF Parameters
Near field Category	**E-field emissions CW dB(V/m)**
f < 960 MHz	
M1	50 to 55
M2	45 to 50
M3	40 to 45
M4	< 40
f > 960 MHz	
M1	40 to 45
M2	35 to 40
M3	30 to 35
M4	< 30

Table 3-1
WD near-field categories as defined in ANSI C63.19-2011

© 2019 PCTEST Engineering Laboratory, Inc. All rights reserved. Unless otherwise specified, no part of this report may be reproduced or utilized in any part, form or by any means, electronic or mechanical, including photocopying and microfilm, without permission in writing from PCTEST Engineering Laboratory, Inc. If you have any questions about this international copyright or have an enquiry about obtaining additional rights to this report or assembly of contents thereof, please contact INFO@PCTEST.COM.

4. SYSTEM SPECIFICATIONS

EF3DV3 E-Field Probe Description

Construction:	One dipole parallel, two dipoles normal to probe axis Built-in shielding against static charges
Calibration:	In air from 30 MHz to 6.0 GHz (absolute accuracy ±5.1%, k=2)
Frequency:	30 MHz to > 6 GHz; Linearity: ± 0.2 dB (30 MHz to 6 GHz)
Directivity	± 0.2 dB in air (rotation around probe axis) ± 0.4 dB in air (rotation normal to probe axis)
Dynamic Range	2 V/m to > 1000 V/m (M3 or better device readings fall well below diode compression point)
Linearity:	± 0.2 dB
Dimensions	Overall length: 337 mm (Tip: 20 mm) Tip diameter: 4.0 mm (Body: 12 mm) Distance from probe tip to dipole centers: 1.5 mm

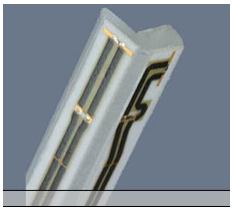

Figure 4-1
E-field Free-space Probe

Probe Tip Description

HAC field measurements take place in the close near field with high gradients. Increasing the measuring distance from the source will generally decrease the measured field values (in case of the validation dipole approx. 10% per mm).

The electric field probes have an irregular internal geometry because it is physically not possible to have the 3 orthogonal sensors situated with the same center. The effect of the different sensor centers is accounted for in the HAC uncertainty budget ("sensor displacement").

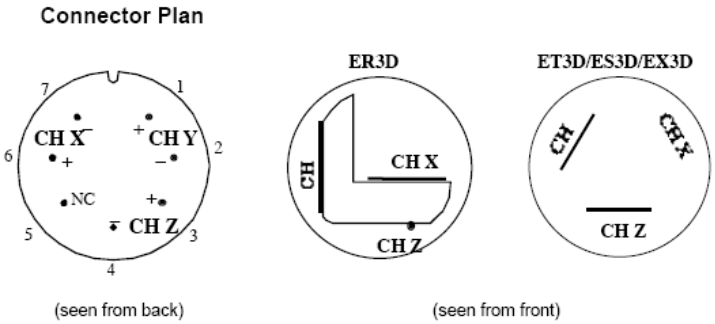

The antistatic shielding inside the probe is connected to the probe connector case.

© 2019 PCTEST Engineering Laboratory, Inc. All rights reserved. Unless otherwise specified, no part of this report may be reproduced or utilized in any part, form or by any means, electronic or mechanical, including photocopying and microfilm, without permission in writing from PCTEST Engineering Laboratory, Inc. If you have any questions about this international copyright or have an enquiry about obtaining additional rights to this report or assembly of contents thereof, please contact INFO@PCTEST.COM.

Instrumentation Chain

Equation 1

Conversion of Connector Voltage u_i to E-Field E_i

$$E_i = \sqrt{\frac{u_i + (u_i^2 \cdot CF)/(DCP)}{Norm_i \cdot ConvF}}$$

whereby

E_i:	electric field in V/m
u_i:	voltage of channel i at the connector in µV
$Norm_i$:	sensitivity of channel i in µV/(V/m)^2
ConvF:	enhancement factor in liquid (ConvF=1 for Air)
DCP:	diode compression point in µV
CF:	signal crest factor (peak power/average power)

Conditions of Calibration

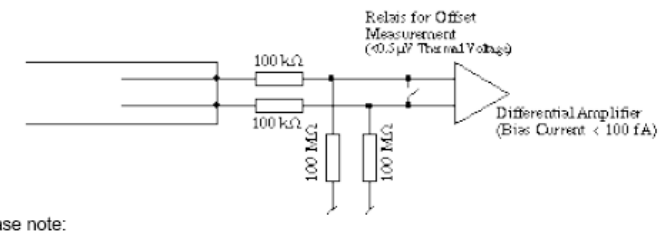

Please note:

- a lower input impedance of the amplifier will result in different sensitivity factors $Norm_i$ and *DCP*
- larger bias currents will cause higher offset

Probe Response to Frequency

The E-field sensors have inherently a very flat frequency response. They are calibrated with a number of frequencies resulting in a common calibration factor, with the frequency behavior documented in the calibration certificate (See also below).

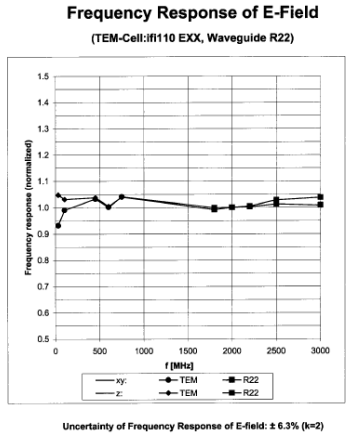

Figure 4-2 E-Field Probe Frequency Response

© 2019 PCTEST Engineering Laboratory, Inc. All rights reserved. Unless otherwise specified, no part of this report may be reproduced or utilized in any part, form or by any means, electronic or mechanical, including photocopying and microfilm, without permission in writing from PCTEST Engineering Laboratory, Inc. If you have any questions about this international copyright or have an enquiry about obtaining additional rights to this report or assembly of contents thereof, please contact INFO@PCTEST.COM.

SPEAG Robotic System

E-field measurements are performed using the DASY5 automated dosimetric assessment system. The DASY5 is made by Schmid & Partner Engineering AG (SPEAG) in Zurich, Switzerland and consists of high precision robotics system (Staubli), robot controller, Intel CORE i7 computer, near-field probe, probe alignment sensor, and the HAC phantom. The robot is a six-axis industrial robot performing precise movements to position the probe to the location (points) of maximum electromagnetic field (EMF).

Figure 4-3
SPEAG Robotic System

System Hardware

A cell controller system contains the power supply, robot controller, teach pendant (Joystick), and a remote control used to drive the robot motors. The PC consists of the computer with operating system and RF Measurement Software DASY5 v52.8 (with HAC Extension), A/D interface card, monitor, mouse, and keyboard. The Staubli Robot is connected to the cell controller to allow software manipulation of the robot. A data acquisition electronic (DAE) circuit that performs the signal amplification, signal multiplexing, AD-conversion, offset measurements, mechanical surface detection, collision detection, etc. is connected to the Electro-optical coupler (EOC). The EOC performs the conversion from the optical into digital electric signal of the DAE and transfers data to the PC plug-in card.

© 2019 PCTEST Engineering Laboratory, Inc. All rights reserved. Unless otherwise specified, no part of this report may be reproduced or utilized in any part, form or by any means, electronic or mechanical, including photocopying and microfilm, without permission in writing from PCTEST Engineering Laboratory, Inc. If you have any questions about this international copyright or have an enquiry about obtaining additional rights to this report or assembly of contents thereof, please contact INFO@PCTEST.COM.

System Electronics

The DAE consists of a highly sensitive electrometer-grade preamplifier with auto-zeroing, a channel and gain-switching multiplexer, a fast 16 bit AD-converter and a command decoder and control logic unit. Transmission to the PC-card is accomplished through an optical downlink for data and status information and an optical uplink for commands and clock lines. The mechanical probe mounting device includes two different sensor systems for frontal and sidewise probe contacts. They are also used for mechanical surface detection and probe collision detection. The robot uses its own controller with a built in VME-bus computer.

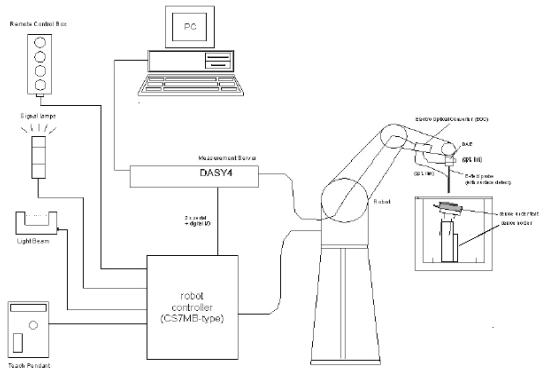

Figure 4-4
SPEAG Robotic System Diagram

DASY5 Instrumentation Chain

The first step of the evaluation is a linearization of the filtered input signal to account for the compression characteristics of the detector diode. The compensation depends on the input signal, the diode type and the DC-transmission factor from the diode to the evaluation electronics. If the exciting field is pulsed, the crest factor of the signal must be known to correctly compensate for peak power. The formula for each channel can be given as:

$$V_i = U_i + U_i^2 \cdot \frac{cf}{dcp_i}$$

with	V_i	= compensated signal of channel i	(i = x, y, z)
	U_i	= input signal of channel i	(i = x, y, z)
	cf	= crest factor of exciting field	(DASY parameter)
	dcp_i	= diode compression point	(DASY parameter)

© 2019 PCTEST Engineering Laboratory, Inc. All rights reserved. Unless otherwise specified, no part of this report may be reproduced or utilized in any part, form or by any means, electronic or mechanical, including photocopying and microfilm, without permission in writing from PCTEST Engineering Laboratory, Inc. If you have any questions about this international copyright or have an enquiry about obtaining additional rights to this report or assembly of contents thereof, please contact INFO@PCTEST.COM.

From the compensated input signals the primary field data for each channel can be evaluated:

$$\text{E} - \text{fieldprobes}: \qquad E_i = \sqrt{\frac{V_i}{Norm_i \cdot ConvF}}$$

with	V_i	= compensated signal of channel i	(i = x, y, z)
	$Norm_i$	= sensor sensitivity of channel i	(i = x, y, z)
		μV/(V/m)^2 for E-field Probes	
	$ConvF$	= sensitivity enhancement in solution	
	E_i	= electric field strength of channel i in V/m	

The RSS value of the field components gives the total field strength (Hermitian magnitude):

$$E_{tot} = \sqrt{E_x^2 + E_y^2 + E_z^2}$$

The primary field data are used to calculate the derived field units.

The measurement/integration time per point, as specified by the system manufacturer is >500ms.

The signal response time is evaluated as the time required by the system to reach 90% of the expected final value after an on/off switch of the power source with an integration time of 500ms and a probe response time of <5 ms. In the current implementation, DASY5 waits longer than 100ms after having reached the grid point before starting a measurement, i.e., the response time uncertainty is negligible.

If the device under test does not emit a CW signal, the integration time applied to measure the electric field at a specific point may introduce additional uncertainties due to the discretization. The tolerances for the different systems had the worst-case of 2.6%.

Environmental Conditions

Environmental conditions such as temperature and relative humidity are monitored to ensure there are no impacts on system specifications. Proper voltage and power line frequency conditions are maintained with three phase power sources. Environmental noise and reflections are monitored through system checks.

© 2019 PCTEST Engineering Laboratory, Inc. All rights reserved. Unless otherwise specified, no part of this report may be reproduced or utilized in any part, form or by any means, electronic or mechanical, including photocopying and microfilm, without permission in writing from PCTEST Engineering Laboratory, Inc. If you have any questions about this international copyright or have an enquiry about obtaining additional rights to this report or assembly of contents thereof, please contact INFO@PCTEST.COM.

5. TEST PROCEDURE

I. RF EMISSIONS

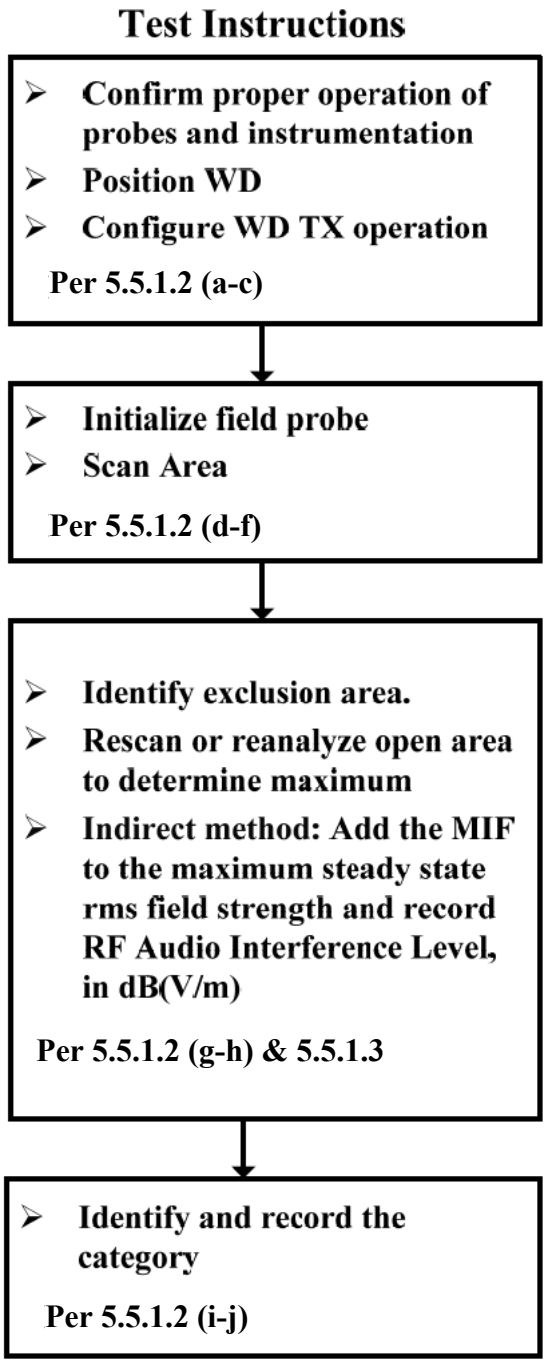

Figure 5-1 RF Emissions Flow Chart

© 2019 PCTEST Engineering Laboratory, Inc. All rights reserved. Unless otherwise specified, no part of this report may be reproduced or utilized in any part, form or by any means, electronic or mechanical, including photocopying and microfilm, without permission in writing from PCTEST Engineering Laboratory, Inc. If you have any questions about this international copyright or have an enquiry about obtaining additional rights to this report or assembly of contents thereof, please contact INFO@PCTEST.COM.

Test Setup

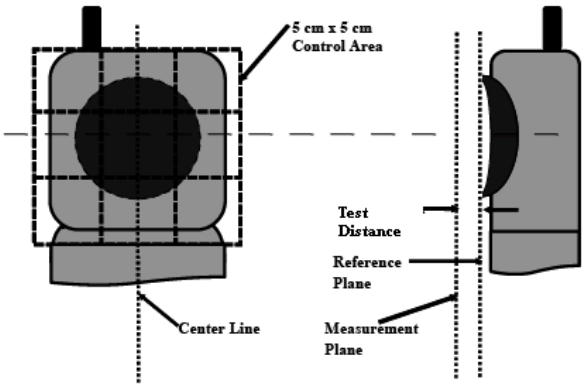

Figure 5-2
E-Field Emissions Test Setup Diagram (See Test Photographs for actual WD scan grid overlay)

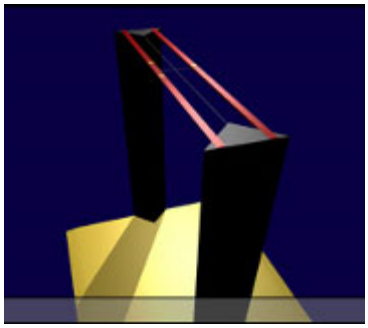

Figure 5-3
HAC Phantom

RF Emissions Test Procedure:

The following illustrate a typical RF emissions test scan over a wireless communications device:

1. Proper operation of the field probe, probe measurement system, other instrumentation, and the positioning system was confirmed.

2. WD is positioned in its intended test position, acoustic output point of the device perpendicular to the field probe.

3. The WD operation for maximum rated RF output power was configured and confirmed with the base station simulator, at the test channel and other normal operating parameters as intended for the test. The battery was ensured to be fully charged before each test.

4. The center sub-grid was centered over the center of the acoustic output (also audio band magnetic output, if applicable). The WD audio output was positioned tangent (as physically possible) to the measurement plane.

5. A surface calibration was performed before each setup change to ensure repeatable spacing and proper maintenance of the measurement plane using the HAC Phantom.

6. The measurement system measured the field strength at the reference location.

7. Measurements at 2mm or 5mm increments in the 5 x 5 cm region were performed at a distance 15 mm from the center point of the probe measurement element to the WD. Of the 9 subgrids (see Figure 5-2), 3 contiguous subgrids may be excluded from the measurement in order to account for localized areas of higher field intensities. The center subgrid containing the acoustic output or audio band magnetic output may not excluded. A 360° rotation about the azimuth axis at the maximum interpolated position was measured. For the worst-case condition, the peak reading from this rotation was used in re-evaluating the HAC category.

8. The system performed a drift evaluation by measuring the field at the reference location. If the power drift deviated by more than 5%, the HAC test and drift measurements were repeated.

© 2019 PCTEST Engineering Laboratory, Inc. All rights reserved. Unless otherwise specified, no part of this report may be reproduced or utilized in any part, form or by any means, electronic or mechanical, including photocopying and microfilm, without permission in writing from PCTEST Engineering Laboratory, Inc. If you have any questions about this international copyright or have an enquiry about obtaining additional rights to this report or assembly of contents thereof, please contact INFO@PCTEST.COM.

6. SYSTEM CHECK

I. System Check Parameters

The input signal was an un-modulated continuous wave. The following points were taken into consideration in performing this check:

- Average Input Power P = 100mW RMS (20dBm RMS) after adjustment for return loss
- The test fixture must meet the 2 wavelength separation criterion
- The proper measurement of the 15 mm probe to dipole separation, which is measured from top surface of the dipole to the calibration reference point of the sensor, defined by the probe manufacturer is shown in the following diagram:

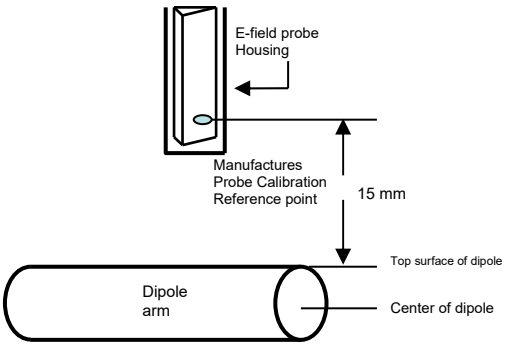

Figure 6-1
Separation Distance from Dipole to Field Probe

RF power was recorded using both an average reading meter and a peak reading meter. Readings of the probe are provided by the measurement system.

To assure proper operation of the near-field measurement probe the input power to the dipole shall be commensurate with the full rated output power of the wireless device [e.g. - for a cellular phone wireless device the average peak antenna input power will be on the order of 100mW (20dBm) RMS] after adjustment for any mismatch.

II. Validation Procedure

A dipole antenna meeting the requirements given in C63.19 was placed in the position normally occupied by the WD.

The length of the dipole was scanned, and the average peak value was recorded.

Measurement of CW

Using the near-field measurement system, scan the antenna over the radiating dipole and record the greatest field reading observed. Due to the nature of E-fields about free-space dipoles, the two E-field peaks measured over the dipole are averaged to compensate for non-parallelity of the setup (see manufacturer method on dipole calibration certificates, page 2). Field strength measurements shall be made only when the probe is stationary.

© 2019 PCTEST Engineering Laboratory, Inc. All rights reserved. Unless otherwise specified, no part of this report may be reproduced or utilized in any part, form or by any means, electronic or mechanical, including photocopying and microfilm, without permission in writing from PCTEST Engineering Laboratory, Inc. If you have any questions about this international copyright or have an enquiry about obtaining additional rights to this report or assembly of contents thereof, please contact INFO@PCTEST.COM.

RF power was recorded using both an average and a peak power reading meter.

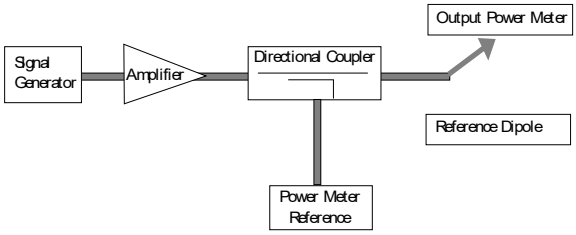

Figure 6-2
Setup for Desired Output Power to Dipole

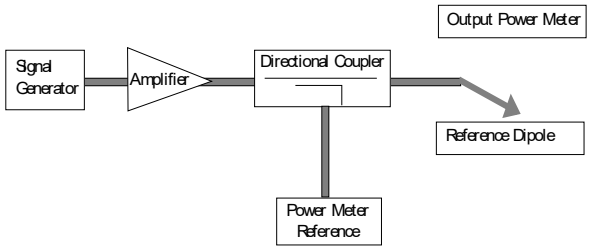

Figure 6-3
Setup to Dipole

Using this setup configuration, the signal generator was adjusted for the desired output power (100mW) at a specified frequency. The reference power from the coupled port of the directional coupler is recorded. Next, the output cable is connected to the reference dipole, as shown in Figure 6-3.

The input signal level was adjusted until the reference power from the coupled port of the directional coupler was the same as previously recorded, to compensate for the impedance mismatch between the output cable and the reference dipole. To assure proper operation of the near-field measurement probe the input power to the reference dipole was verified to the full rated output power of the wireless device. The dipole was secured in a holder in a manner to meet the 20 dB reflection. The near-field measurement probe was positioned over the dipole. The antenna was scanned over the appropriate sized area to cover the dipole from end to end. SPEAG uses 2D interpolation algorithms between the measured points. Please see below two dimensional plots showing that the interpolated values interpolate smoothly between 5mm steps for a free-space RF dipole:

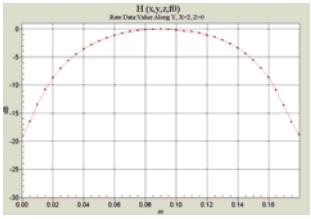

Figure 6-4
2-D Raw Data from scan along dipole axis

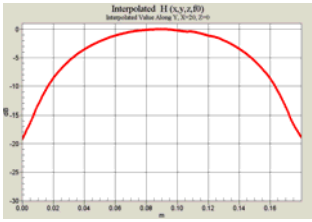

Figure 6-5
2-D Interpolated points from scan along dipole axis

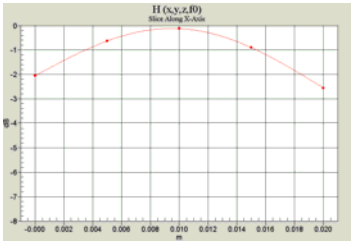

Figure 6-6
2-D Raw Data from scan along transverse axis

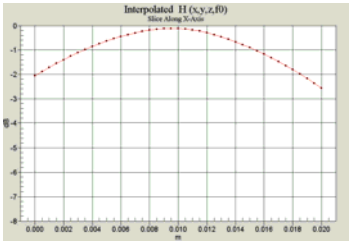

Figure 6-7
2-D Interpolated points from scan along transverse axis

© 2019 PCTEST Engineering Laboratory, Inc. All rights reserved. Unless otherwise specified, no part of this report may be reproduced or utilized in any part, form or by any means, electronic or mechanical, including photocopying and microfilm, without permission in writing from PCTEST Engineering Laboratory, Inc. If you have any questions about this international copyright or have an enquiry about obtaining additional rights to this report or assembly of contents thereof, please contact INFO@PCTEST.COM.

III. System Check Results

Validation Results

Date	Frequency (MHz)	Probe S/N	DAE S/N	Dipole S/N	Input Power (dBm)	E-field Result (V/m)	Target Field (V/m)	% Deviation
8/26/2019	835	4035	1415	1003	20.0	111.8	**105.2**	**6.3%**
	1880			1137	20.0	88.0	**87.8**	**0.2%**
9/16/2019	1880			1137	20.0	89.8	**87.8**	**2.2%**
9/9/2019	2600			1012	20.0	87.7	**85.2**	**2.9%**
	3500			1005	20.0	85.6	**84.1**	**1.8%**

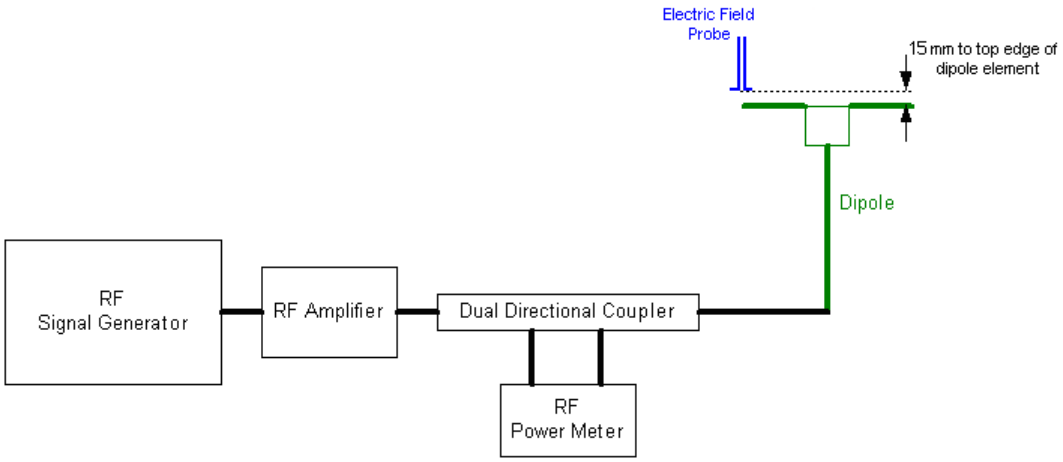

Figure 6-8
System Check Setup

© 2019 PCTEST Engineering Laboratory, Inc. All rights reserved. Unless otherwise specified, no part of this report may be reproduced or utilized in any part, form or by any means, electronic or mechanical, including photocopying and microfilm, without permission in writing from PCTEST Engineering Laboratory, Inc. If you have any questions about this international copyright or have an enquiry about obtaining additional rights to this report or assembly of contents thereof, please contact INFO@PCTEST.COM.

7. MODULATION INTERFERENCE FACTOR

I. Measuring Modulation Interference Factors

For any specific fixed and repeatable modulated signal, a modulation interference factor (MIF, expressed in dB) may be determined that relates its interference potential to its steady-state RMS signal level or average power level. This factor is a function only of the audio-frequency amplitude modulation characteristics of the signal and is the same for field-strength and conducted power measurements. The MIF is valid only for a specific repeatable audio-frequency amplitude modulation characteristic; any change in modulation characteristic requires determination and application of a new MIF.

The MIF may be determined using a radiated RF field or a conducted RF signal:

a. Using RF illumination or conducted coupling, apply the specific modulated signal in question to the measurement system at a level within its confirmed operating dynamic range.
b. Measure the steady-state RMS level at the output of the fast probe or sensor.
c. Measure the steady-state average level at the weighting output.
d. Without changing the square-law detector or weighting system, and using RF illumination or conducted coupling, substitute for the specific modulated signal a 1 kHz, 80% amplitude modulated carrier at the same frequency and adjust its strength until the level at the weighting output equals the step c) measurement.
e. Without changing the carrier level from step d), remove the 1 kHz modulation and again measure the steady-state RMS level indicated at the output of the fast probe or sensor.
f. The MIF for the specific modulation characteristic is provided by the ratio of the step e) measurement to the step b) measurement, expressed in dB (20 × log[(step e)/(step b)]).

The following procedure was used to measure the MIF using the SPEAG Audio Interference Analyzer (AIA), Type No: SE UMS 170 CB, Serial No.: 1010:

1. The device was placed into a simulated call using a base station simulator or set to transmit using test software for a given mode.
2. The device was then set to continuously transmit at maximum power.
3. Using a coupler if needed, the device output signal was connected to the RF In port of the AIA, which was connected to a desktop computer. Alternatively, a radiated RF signal may be used with the AIA's built-in antenna.
4. The MIF measurement procedure in the DASY software was run, and the resulting MIF value was recorded.
5. Steps 1-4 were repeated for all CMRS air interfaces, frequency bands, and modulations.

The modulation interference factors obtained were applied to readings taken of the actual wireless device in order to obtain an accurate audio interference level reading using the formula:

Audio Interference Level [dB(V/m)] = 20 * log[Raw Field Value (V/m)] + MIF (dB)

Because the MIF value is output power independent, MIF values for a given mode should be constant across all devices; however, per C63.19-2011 §D.7, MIF values should be measured for each device being evaluated. The voice modes for this device have been investigated in this section of the report.

© 2019 PCTEST Engineering Laboratory, Inc. All rights reserved. Unless otherwise specified, no part of this report may be reproduced or utilized in any part, form or by any means, electronic or mechanical, including photocopying and microfilm, without permission in writing from PCTEST Engineering Laboratory, Inc. If you have any questions about this international copyright or have an enquiry about obtaining additional rights to this report or assembly of contents thereof, please contact INFO@PCTEST.COM.

II. MIF Measurement Block Diagrams

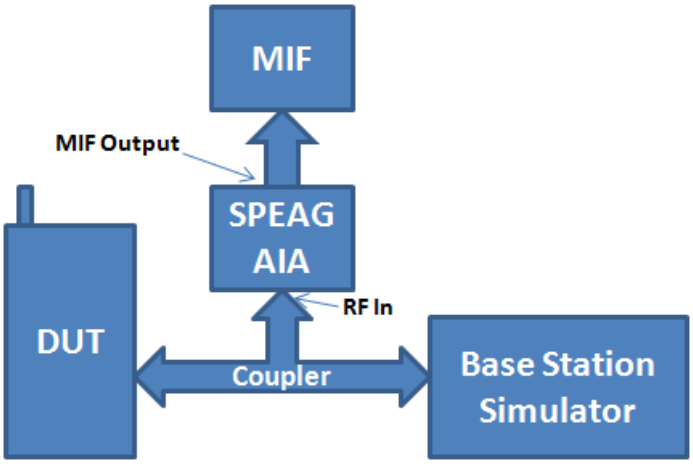

Figure 7-1
MIF Measurement Setup
for licensed modes

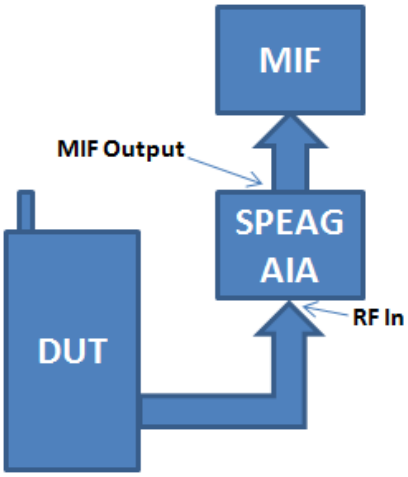

Figure 7-2
MIF Measurement Setup
for unlicensed modes

III. Measured Modulation Interference Factors:

Table 7-1
CDMA Modulation Interference Factors[1]

Mode		Cell				PCS		
		90S	22H	22H	22H	24E	24E	24E
		564	1013	384	777	25	600	1175
CDMA	RC1/SO3	3.00	2.94	2.98	2.93	2.94	2.92	2.93
	RC3/SO3	-19.23	-19.18	-19.21	-19.13	-19.42	-19.24	-19.13
	EvDO	-18.40	-18.41	-18.53	-18.51	-18.39	-18.44	-18.55

Table 7-2
GSM Modulation Interference Factors[1]

Mode		GSM850			GSM1900		
		128	190	251	512	661	810
GSM	Voice	3.54	3.54	3.54	3.50	3.50	3.50
	EDGE	3.70	3.72	3.74	3.73	3.71	3.74

Table 7-3
UMTS Modulation Interference Factors[1]

Mode		UMTS V			UMTS IV			UMTS II		
		4132	4183	4233	1312	1412	1513	9262	9400	9538
UMTS	12.2 kbps RMC	-23.25	-23.68	-23.69	-22.61	-23.66	-22.86	-22.66	-22.77	-22.94
	12.2 kbps AMR	-13.45	-13.38	-13.35	-13.47	-13.51	-13.56	-13.56	-13.39	-13.64
	HSUPA Subtest1	-22.49	-22.50	-22.68	-22.97	-23.05	-22.96	-22.64	-22.41	-22.68

[1] Note: Measured MIF values may be lower than sample MIF values provided in ANSI C63.19-2011 Annex D.7 Table D.5 due to manufacturing variations for each device, however per Annex D.7, the sample MIF values of Table D.5 are not intended to substitute for measurements of actual devices under test and their respective operating modes.

© 2019 PCTEST Engineering Laboratory, Inc. All rights reserved. Unless otherwise specified, no part of this report may be reproduced or utilized in any part, form or by any means, electronic or mechanical, including photocopying and microfilm, without permission in writing from PCTEST Engineering Laboratory, Inc. If you have any questions about this international copyright or have an enquiry about obtaining additional rights to this report or assembly of contents thereof, please contact INFO@PCTEST.COM.

Table 7-4
LTE FDD Modulation Interference Factors[1,2]

LTE Band	Frequency [MHz]	Channel	Bandwidth [MHz]	Modulation	RB Size	RB Offset	MIF [dB]
71	680.5	133297	20	16QAM	1	0	-9.72
12	707.5	23095	10	16QAM	1	0	-9.73
13	782.0	23230	10	16QAM	1	0	-10.70
14	793.0	23330	10	16QAM	1	0	-9.81
26	831.5	26865	15	16QAM	1	0	-9.74
5	836.5	20525	10	16QAM	1	0	-9.76
66	1745.0	132322	20	16QAM	1	0	-9.64
25	1882.5	26365	20	16QAM	1	0	-9.61
30	2310.0	27710	10	16QAM	1	0	-10.38
7	2535.0	21100	20	16QAM	1	0	-10.00
25	1882.5	26365	20	QPSK	1	0	-14.90
25	1882.5	26365	20	64QAM	1	0	-9.87
25	1882.5	26365	20	16QAM	1	50	-9.97
25	1882.5	26365	20	16QAM	1	99	-9.93
25	1882.5	26365	20	16QAM	50	0	-15.88
25	1882.5	26365	20	16QAM	100	0	-16.94
25	1882.5	26365	15	16QAM	1	0	-9.70
25	1882.5	26365	10	16QAM	1	0	-9.71
25	1882.5	26365	5	16QAM	1	0	-9.51
25	1882.5	26365	3	16QAM	1	0	-9.68
25	1882.5	26365	1.4	16QAM	1	0	-10.53
25	1852.5	26065	5	16QAM	1	0	-9.62
25	1912.5	26665	5	16QAM	1	0	-10.70

Table 7-5
LTE FDD Uplink Carrier Aggregation Modulation Interference Factor[1,3]

Combination	PCC							SCC							MIF (dB)
	PCC Band	PCC Bandwidth [MHz]	PCC (UL) Channel	PCC (UL) Frequency [MHz]	Modulation	PCC UL# RB	PCC UL RB Offset	SCC Band	SCC Bandwidth [MHz]	SCC (UL) Channel	SCC (UL) Frequency [MHz]	Modulation	SCC UL# RB	SCC UL RB Offset	
CA_5B	LTE B5	10	20525	836.5	16QAM	1	0	LTE B5	5	20453	829.3	16QAM	1	24	-11.72

[1] Note: Measured MIF values may be lower than sample MIF values provided in ANSI C63.19-2011 Annex D.7 Table D.5 due to manufacturing variations for each device, however per Annex D.7, the sample MIF values of Table D.5 are not intended to substitute for measurements of actual devices under test and their respective operating modes.

[2] Note: All FDD LTE bands were found to have substantially similar MIF values given similar RB, BW, and modulation configurations.

[3] Note: LTE FDD ULCA was evaluated to ensure LTE FDD standalone was the worst-case scenario. The configurations in Table 7-5 were determined from Table 7-4 and satisfy the configuration requirements as defined in 3GPP 36.101.

© 2019 PCTEST Engineering Laboratory, Inc. All rights reserved. Unless otherwise specified, no part of this report may be reproduced or utilized in any part, form or by any means, electronic or mechanical, including photocopying and microfilm, without permission in writing from PCTEST Engineering Laboratory, Inc. If you have any questions about this international copyright or have an enquiry about obtaining additional rights to this report or assembly of contents thereof, please contact INFO@PCTEST.COM.

Table 7-6
LTE TDD B41 Power Class 3 Modulation Interference Factors[1,2]

LTE Band	Frequency [MHz]	Channel	Bandwidth [MHz]	Modulation	RB Size	RB Offset	MIF [dB]
41	2593.0	40620	20	16QAM	1	0	1.56
41	2593.0	40620	20	QPSK	1	0	1.50
41	2593.0	40620	20	64QAM	1	0	1.52
41	2593.0	40620	20	16QAM	1	50	1.52
41	2593.0	40620	20	16QAM	1	99	1.53
41	2593.0	40620	20	16QAM	50	0	1.43
41	2593.0	40620	20	16QAM	100	0	1.45
41	2593.0	40620	15	16QAM	1	0	1.59
41	2593.0	40620	10	16QAM	1	0	1.58
41	2593.0	40620	5	16QAM	1	0	1.52
41	2506.0	39750	15	16QAM	1	0	1.50
41	2549.5	40185	15	16QAM	1	0	1.46
41	2636.5	41055	15	16QAM	1	0	1.51
41	2680.0	41490	15	16QAM	1	0	1.47

Table 7-7
LTE TDD B41 Power Class 2 Modulation Interference Factors[1,2]

LTE Band	Frequency [MHz]	Channel	Bandwidth [MHz]	Modulation	RB Size	RB Offset	MIF [dB]
41	2593.0	40620	20	16QAM	1	0	1.59
41	2593.0	40620	20	QPSK	1	0	1.50
41	2593.0	40620	20	64QAM	1	0	1.54
41	2593.0	40620	20	16QAM	1	50	1.58
41	2593.0	40620	20	16QAM	1	99	1.53
41	2593.0	40620	20	16QAM	50	0	1.45
41	2593.0	40620	20	16QAM	100	0	1.46
41	2593.0	40620	15	16QAM	1	0	1.60
41	2593.0	40620	10	16QAM	1	0	1.61
41	2593.0	40620	5	16QAM	1	0	1.53
41	2506.0	39750	10	16QAM	1	0	1.52
41	2549.5	40185	10	16QAM	1	0	1.48
41	2636.5	41055	10	16QAM	1	0	1.60
41	2680.0	41490	10	16QAM	1	0	1.51

Table 7-8
LTE TDD Uplink Carrier Aggregation Modulation Interference Factor[1,3]

Combination	PCC							SCC							MIF (dB)
	PCC Band	PCC Bandwidth [MHz]	PCC (UL/DL) Channel	PCC (UL/DL) Frequency [MHz]	Modulation	PCC UL# RB	PCC UL RB Offset	SCC Band	SCC Bandwidth [MHz]	SCC (UL/DL) Channel	SCC (UL/DL) Frequency [MHz]	Modulation	SCC UL# RB	SCC UL RB Offset	
CA_41C (PC3)	LTE B41	20	40620	2593.0	16QAM	1	0	LTE B41	20	40422	2573.2	16QAM	1	99	1.50
CA_41C (PC2)	LTE B41	20	40620	2593.0	16QAM	1	0	LTE B41	20	40422	2573.2	16QAM	1	99	1.41

[1] Note: Measured MIF values may be lower than sample MIF values provided in ANSI C63.19-2011 Annex D.7 Table D.5 due to manufacturing variations for each device, however per Annex D.7, the sample MIF values of Table D.5 are not intended to substitute for measurements of actual devices under test and their respective operating modes.

[2] Note: LTE TDD MIFs were taken using UL-DL Configuration 2. More information about the chosen UL-DL Configuration can be found in Section 10.

[3] Note: LTE TDD ULCA was evaluated to ensure LTE TDD standalone was the worst-case scenario. The configuration in Table 7-8 was determined from Tables 7-6 and 7-7 and satisfies the configuration requirements as defined in 3GPP 36.101. These MIFs were evaluated with UL-DL Configuration 2 for Power Class 3 and Power Class 2 LTE TDD.

© 2019 PCTEST Engineering Laboratory, Inc. All rights reserved. Unless otherwise specified, no part of this report may be reproduced or utilized in any part, form or by any means, electronic or mechanical, including photocopying and microfilm, without permission in writing from PCTEST Engineering Laboratory, Inc. If you have any questions about this international copyright or have an enquiry about obtaining additional rights to this report or assembly of contents thereof, please contact INFO@PCTEST.COM.

Table 7-9
LTE TDD B48 Modulation Interference Factors[1,3]

LTE Band	Frequency [MHz]	Channel	Bandwidth [MHz]	Modulation	RB Size	RB Offset	MIF [dB]
48	3603.3	55773	20	16QAM	1	0	1.55
48	3603.3	55773	20	QPSK	1	0	1.49
48	3603.3	55773	20	64QAM	1	0	1.54
48	3603.3	55773	20	16QAM	1	50	1.54
48	3603.3	55773	20	16QAM	1	99	1.54
48	3603.3	55773	20	16QAM	50	0	1.41
48	3603.3	55773	20	16QAM	100	0	1.41
48	3602.5	55765	15	16QAM	1	0	1.45
48	3601.7	55757	10	16QAM	1	0	1.44
48	3600.8	55748	5	16QAM	1	0	1.42
48	3560.0	55340	20	16QAM	1	0	1.48
48	3646.7	56207	20	16QAM	1	0	1.48
48	3690.0	56640	20	16QAM	1	0	1.55

Table 7-10
802.11b (2.4GHz, SISO) Modulation Interference Factors[1,2]

Mode	802.11b MIF Measurements [dB]			
	Data Rate [Mbps]			
	1	2	5.5	11
802.11b	-10.19	-14.08	-11.27	-10.77

Table 7-11
802.11g (2.4GHz, SISO) Modulation Interference Factors[1,2]

Mode	802.11g MIF Measurements [dB]							
	Data Rate [Mbps]							
	6	9	12	18	24	36	48	54
802.11g	-12.23	-11.43	-11.08	-10.14	-9.63	-9.35	-9.37	-9.43

Table 7-12
802.11g (2.4GHz, MIMO) Modulation Interference Factors[1,2]

Mode	802.11g MIF Measurements [dB]							
	Data Rate [Mbps]							
	12	18	24	36	48	72	92	108
802.11g	-12.05	-11.36	-10.98	-10.11	-9.49	-9.19	-9.29	-9.36

[1] Note: Measured MIF values may be lower than sample MIF values provided in ANSI C63.19-2011 Annex D.7 Table D.5 due to manufacturing variations for each device, however per Annex D.7, the sample MIF values of Table D.5 are not intended to substitute for measurements of actual devices under test and their respective operating modes.

[2] Note: WIFI MIF values were found to be independent of the transmit channel.

[3] Note: LTE TDD MIFs were taken using UL-DL Configuration 2. More information about the chosen UL-DL Configuration can be found in Section 10.

© 2019 PCTEST Engineering Laboratory, Inc. All rights reserved. Unless otherwise specified, no part of this report may be reproduced or utilized in any part, form or by any means, electronic or mechanical, including photocopying and microfilm, without permission in writing from PCTEST Engineering Laboratory, Inc. If you have any questions about this international copyright or have an enquiry about obtaining additional rights to this report or assembly of contents thereof, please contact INFO@PCTEST.COM.

Table 7-13
802.11n (2.4GHz, SISO) Modulation Interference Factors[1,2]

Mode	802.11n (2.4GHz) MIF Measurements [dB]							
	MCS Index							
	0	1	2	3	4	5	6	7
802.11n	-12.43	-11.11	-10.23	-9.88	-9.48	-9.59	-9.64	-9.81

Table 7-14
802.11n (2.4GHz, MIMO) Modulation Interference Factors[1,2]

Mode	802.11n (2.4GHz) MIF Measurements [dB]							
	MCS Index							
	0	1	2	3	4	5	6	7
802.11n	-11.66	-10.38	-9.57	-9.13	-8.93	-9.10	-9.11	-9.33

Table 7-15
802.11ac (2.4GHz, SISO) Modulation Interference Factors[1,2]

Mode	20MHz BW 802.11ac (2.4GHz) MIF Measurements [dB]								
	MCS Index								
	0	1	2	3	4	5	6	7	8
802.11ac	-12.42	-11.12	-10.37	-9.75	-9.51	-9.50	-9.59	-9.81	-10.08

Table 7-16
802.11ac (2.4GHz, MIMO) Modulation Interference Factors[1,2]

Mode	20MHz BW 802.11ac (2.4GHz) MIF Measurements [dB]								
	MCS Index								
	0	1	2	3	4	5	6	7	8
802.11ac	-11.62	-10.43	-9.66	-9.05	-8.98	-9.05	-9.17	-9.36	-9.68

Table 7-17
802.11a (5GHz, 20MHz BW, SISO) Modulation Interference Factors[1,2]

Mode	802.11a MIF Measurements [dB]							
	Data Rate [Mbps]							
	6	9	12	18	24	36	48	54
802.11a	-12.25	-11.46	-11.10	-10.21	-9.70	-9.43	-9.47	-9.53

Table 7-18
802.11a (5GHz, 20MHz BW, MIMO) Modulation Interference Factors[1,2]

Mode	802.11a MIF Measurements [dB]							
	Data Rate [Mbps]							
	12	18	24	36	48	72	92	108
802.11a	-12.12	-11.39	-10.95	-10.13	-9.54	-9.28	-9.33	-9.39

Table 7-19
802.11n (5GHz, 20MHz BW, SISO) Modulation Interference Factors[1,2]

Mode	20MHz BW 802.11n (5GHz) MIF Measurements [dB]							
	MCS Index							
	0	1	2	3	4	5	6	7
802.11n	-12.42	-11.12	-10.25	-9.92	-9.53	-9.65	-9.68	-9.84

[1] Note: Measured MIF values may be lower than sample MIF values provided in ANSI C63.19-2011 Annex D.7 Table D.5 due to manufacturing variations for each device, however per Annex D.7, the sample MIF values of Table D.5 are not intended to substitute for measurements of actual devices under test and their respective operating modes.

[2] Note: WLAN MIF values were found to be independent of the transmit channel.

© 2019 PCTEST Engineering Laboratory, Inc. All rights reserved. Unless otherwise specified, no part of this report may be reproduced or utilized in any part, form or by any means, electronic or mechanical, including photocopying and microfilm, without permission in writing from PCTEST Engineering Laboratory, Inc. If you have any questions about this international copyright or have an enquiry about obtaining additional rights to this report or assembly of contents thereof, please contact INFO@PCTEST.COM.

Table 7-20
802.11n (5GHz, 20MHz BW, MIMO) Modulation Interference Factors[1,2]

Mode	20MHz BW 802.11n (5GHz) MIF Measurements [dB]							
	MCS Index							
	0	1	2	3	4	5	6	7
802.11n	-11.61	-10.36	-11.19	-9.12	-9.95	-9.05	-9.07	-10.13

Table 7-21
802.11ac (5GHz, 20MHz BW, SISO) Modulation Interference Factors[1,2]

Mode	20MHz BW 802.11ac (5GHz) MIF Measurements [dB]								
	MCS Index								
	0	1	2	3	4	5	6	7	8
802.11ac	-12.44	-11.13	-10.42	-9.79	-9.55	-9.56	-9.64	-9.85	-10.09

Table 7-22
802.11ac (5GHz, 20MHz BW, MIMO) Modulation Interference Factors[1,2]

Mode	20MHz BW 802.11ac (5GHz) MIF Measurements [dB]								
	MCS Index								
	0	1	2	3	4	5	6	7	8
802.11ac	-11.62	-10.41	-11.35	-9.06	-8.92	-9.98	-9.11	-9.30	-9.61

Table 7-23
802.11n (5GHz, 40MHz BW, SISO) Modulation Interference Factors[1,2]

Mode	40MHz BW 802.11n (5GHz) MIF Measurements [dB]							
	MCS Index							
	0	1	2	3	4	5	6	7
802.11n	-10.88	-9.66	-9.19	-8.85	-9.20	-9.70	-10.12	-10.44

Table 7-24
802.11n (5GHz, 40MHz BW, MIMO) Modulation Interference Factors[1,2]

Mode	40MHz BW 802.11n (5GHz) MIF Measurements [dB]							
	MCS Index							
	0	1	2	3	4	5	6	7
802.11n	-10.38	-9.99	-9.50	-8.29	-9.11	-9.55	-10.01	-10.38

Table 7-25
802.11ac (5GHz, 40MHz BW, SISO) Modulation Interference Factors[1,2]

Mode	40MHz BW 802.11ac (5GHz) MIF Measurements [dB]								
	MCS Index								
	0	1	2	3	4	5	6	7	9
802.11ac	-10.79	-9.65	-9.12	-8.87	-9.17	-9.70	-10.01	-10.33	-10.99

Table 7-26
802.11ac (5GHz, 40MHz BW, MIMO) Modulation Interference Factors[1,2]

Mode	40MHz BW 802.11ac (5GHz) MIF Measurements [dB]								
	MCS Index								
	0	1	2	3	4	5	6	7	9
802.11ac	-11.07	-9.98	-8.66	-8.35	-9.04	-9.60	-9.81	-10.23	-10.92

[1] Note: Measured MIF values may be lower than sample MIF values provided in ANSI C63.19-2011 Annex D.7 Table D.5 due to manufacturing variations for each device, however per Annex D.7, the sample MIF values of Table D.5 are not intended to substitute for measurements of actual devices under test and their respective operating modes.

[2] Note: WLAN MIF values were found to be independent of the transmit channel.

© 2019 PCTEST Engineering Laboratory, Inc. All rights reserved. Unless otherwise specified, no part of this report may be reproduced or utilized in any part, form or by any means, electronic or mechanical, including photocopying and microfilm, without permission in writing from PCTEST Engineering Laboratory, Inc. If you have any questions about this international copyright or have an enquiry about obtaining additional rights to this report or assembly of contents thereof, please contact INFO@PCTEST.COM.

Table 7-27
802.11ac (5GHz, 80MHz BW, SISO) Modulation Interference Factors[1,2]

Mode	80MHz BW 802.11ac (5GHz) MIF Measurements [dB]									
	MCS Index									
	0	1	2	3	4	5	6	7	8	9
802.11ac	-11.05	-9.86	-9.28	-9.05	-9.41	-10.04	-10.39	-10.58	-11.07	-11.39

Table 7-28
802.11ac (5GHz, 80MHz BW, MIMO) Modulation Interference Factors[1,2]

Mode	80MHz BW 802.11ac (5GHz) MIF Measurements [dB]									
	MCS Index									
	0	1	2	3	4	5	6	7	8	9
802.11ac	-11.19	-9.40	-9.43	-9.26	-9.23	-9.99	-10.31	-10.53	-11.02	-11.25

Table 7-29
Simultaneous 2.4GHz and 5GHz WIFI Modulation Interference Factors[1,2,3]

# Tx	5 GHz WIFI [dBm]		2.4 GHz WIFI [dBm]		Measured MIF (dB)
	Ant1	Ant2	Ant1	Ant2	
2	x	-	-	x	-9.62

[1] Note: Measured MIF values may be lower than sample MIF values provided in ANSI C63.19-2011 Annex D.7 Table D.5 due to manufacturing variations for each device, however per Annex D.7, the sample MIF values of Table D.5 are not intended to substitute for measurements of actual devices under test and their respective operating modes.

[2] Note: WLAN MIF values were found to be independent of the transmit channel.

[3] Note: The configuration for each scenario (e.g. bandwidth, data rate, etc.) was determined using the worst-case configuration from SISO MIF measurements.

© 2019 PCTEST Engineering Laboratory, Inc. All rights reserved. Unless otherwise specified, no part of this report may be reproduced or utilized in any part, form or by any means, electronic or mechanical, including photocopying and microfilm, without permission in writing from PCTEST Engineering Laboratory, Inc. If you have any questions about this international copyright or have an enquiry about obtaining additional rights to this report or assembly of contents thereof, please contact INFO@PCTEST.COM.

8. RF CONDUCTED POWER MEASUREMENTS

I. Procedures Used to Establish RF Signal for HAC Testing

The handset was placed into a simulated call using a base station simulator in a shielded chamber. Such test signals offer a consistent means for testing HAC and are recommended for evaluating HAC. Measurements were taken with a fully charged battery. In order to verify that the device was tested and maintained at full power, this was configured with the base station simulator.

II. HAC Measurement Conditions

Output Power Verification

Maximum output power is verified on the High, Middle and Low channels for all applicable air interfaces. See Table 8-1 for air interface specific settings of transmit power parameters.

Table 8-1
Power Control Parameters and Settings by Air Interface

Air Interface:	Parameter Name:	Parameter Set To:
CDMA	Power Control Bits	"All Up"
GSM	PCL	GSM850: "5"; GSM1900: "0"
UMTS	TPC	"All 1's"
LTE	TPC	"Max Power"
WIFI	Mfr Configured	Mfr Specified

III. Setup Used to Measure RF Conducted Powers

Power measurements for licensed modes were performed using a base station simulator under digital average power. Power measurements for unlicensed modes were performed using a power meter and power sensor.

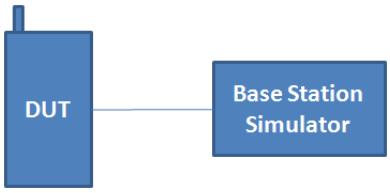

Figure 8-1
Power Measurement Setup for licensed modes

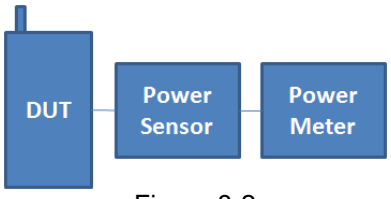

Figure 8-2
Power Measurement Setup for unlicensed modes

IV. CDMA Conducted Powers

Band	Channel	Rule Part	Frequency	SO2 [dBm]	SO2 [dBm]	SO2 [dBm]	SO55 [dBm]	SO55 [dBm]	SO75 [dBm]	SO9 [dBm]	SO9 [dBm]	SO3 [dBm]	SO3 [dBm]	SO3 [dBm]	1x EvDO Rev. A [dBm]
	F-RC		MHz	RC1	RC3	RC4	RC1	RC3	RC11	RC2	RC5	RC1	RC3	RC4	(RETAP)
Cellular	564	90S	820.1	25.26	25.23	25.26	25.25	25.25	25.33	25.21	25.22	25.23	25.26	25.34	25.28
Cellular	1013	22H	824.7	25.17	25.18	25.18	25.19	25.15	25.20	25.17	25.14	25.19	25.15	25.16	25.25
	384	22H	836.52	25.18	25.17	25.19	25.18	25.19	25.22	25.20	25.19	25.19	25.18	25.19	25.28
	777	22H	848.31	25.19	25.16	25.19	25.20	25.23	25.25	25.25	25.24	25.26	25.25	25.23	25.26
PCS	25	24E	1851.25	24.12	24.15	24.13	24.14	24.15	24.19	24.12	24.15	24.13	24.13	24.13	24.17
	600	24E	1880	24.10	24.08	24.10	24.10	24.06	24.09	24.06	24.11	24.05	24.12	24.09	24.20
	1175	24E	1908.75	24.02	24.00	24.01	24.02	24.01	24.07	24.01	24.02	23.99	24.03	24.00	24.08

© 2019 PCTEST Engineering Laboratory, Inc.

© 2019 PCTEST Engineering Laboratory, Inc. All rights reserved. Unless otherwise specified, no part of this report may be reproduced or utilized in any part, form or by any means, electronic or mechanical, including photocopying and microfilm, without permission in writing from PCTEST Engineering Laboratory, Inc. If you have any questions about this international copyright or have an enquiry about obtaining additional rights to this report or assembly of contents thereof, please contact INFO@PCTEST.COM.

V. GSM Conducted Powers

Band	Channel	GSM [dBm] CS (1 Slot)	EDGE [dBm] 1 Tx Slot
GSM 850	128	33.24	26.70
	190	33.23	26.66
	251	33.17	26.52
GSM 1900	512	29.99	25.82
	661	30.03	25.81
	810	30.15	25.75

VI. UMTS Conducted Powers

Mode	3GPP 34.121 Subtest	Cellular Band [dBm]			AWS Band [dBm]			PCS Band [dBm]		
		4132	4183	4233	1312	1412	1513	9262	9400	9538
WCDMA	12.2 kbps RMC	25.26	25.25	25.25	24.96	24.96	24.92	24.16	24.20	24.18
	12.2 kbps AMR	25.26	25.26	25.27	24.98	24.95	24.92	24.17	24.17	24.13
HSUPA	Subtest 1	24.26	24.25	24.20	23.64	23.67	23.50	23.11	23.13	23.12

VII. LTE Conducted Powers

a. LTE Band 71

Table 8-2
LTE Band 71 (680.5MHz) Conducted Powers – 20MHz Bandwidth

Modulation	RB Size	RB Offset	Mid Channel 133297 (680.5 MHz) Conducted Power [dBm]	MPR Allowed per 3GPP [dB]	MPR [dB]
QPSK	1	0	25.20	0	0
	1	50	25.11		0
	1	99	25.30		0
	50	0	24.26	0-1	1
	50	25	24.37		1
	50	50	24.31		1
	100	0	24.34		1
16QAM	1	0	24.00	0-1	1
	1	50	24.08		1
	1	99	24.12		1
	50	0	23.12	0-2	2
	50	25	23.17		2
	50	50	23.24		2
	100	0	23.16		2
64QAM	1	0	23.16	0-2	2
	1	50	23.13		2
	1	99	23.14		2
	50	0	22.36	0-3	3
	50	25	22.29		3
	50	50	22.14		3
	100	0	22.22		3

Note: Since LTE Band 71 at 20MHz bandwidth does not support 3 non-overlapping channels, conducted power measurements were made only on the middle channel.

© 2019 PCTEST Engineering Laboratory, Inc. All rights reserved. Unless otherwise specified, no part of this report may be reproduced or utilized in any part, form or by any means, electronic or mechanical, including photocopying and microfilm, without permission in writing from PCTEST Engineering Laboratory, Inc. If you have any questions about this international copyright or have an enquiry about obtaining additional rights to this report or assembly of contents thereof, please contact INFO@PCTEST.COM.

Table 8-3
LTE Band 71 (680.5MHz) Conducted Powers – 15MHz Bandwidth

Modulation	RB Size	RB Offset	Mid Channel 133297 (680.5 MHz) Conducted Power [dBm]	MPR Allowed per 3GPP [dB]	MPR [dB]
QPSK	1	0	25.37	0	0
	1	36	25.43		0
	1	74	25.29		0
	36	0	24.43	0-1	1
	36	18	24.50		1
	36	37	24.44		1
	75	0	24.47		1
16QAM	1	0	24.38	0-1	1
	1	36	24.46		1
	1	74	24.32		1
	36	0	23.33	0-2	2
	36	18	23.41		2
	36	37	23.33		2
	75	0	23.35		2
64QAM	1	0	23.44	0-2	2
	1	36	23.50		2
	1	74	23.30		2
	36	0	22.48	0-3	3
	36	18	22.49		3
	36	37	22.49		3
	75	0	22.45		3

Note: Since LTE Band 71 at 15MHz bandwidth does not support 3 non-overlapping channels, conducted power measurements were made only on the middle channel.

Table 8-4
LTE Band 71 (680.5MHz) Conducted Powers – 10MHz Bandwidth

Modulation	RB Size	RB Offset	Low Channel 133172 (668.0 MHz)	Mid Channel 133297 (680.5 MHz)	High Channel 133422 (693.0 MHz)	MPR Allowed per 3GPP [dB]	MPR [dB]
			Conducted Power [dBm]				
QPSK	1	0	25.08	25.25	25.23	0	0
	1	25	25.01	25.12	25.12		0
	1	49	25.05	25.22	25.13		0
	25	0	24.24	24.29	24.27	0-1	1
	25	12	24.23	24.27	24.27		1
	25	25	24.22	24.22	24.23		1
	50	0	24.18	24.26	24.24		1
16QAM	1	0	24.14	24.28	24.31	0-1	1
	1	25	24.01	24.26	24.22		1
	1	49	24.09	24.07	24.10		1
	25	0	23.12	23.20	23.20	0-2	2
	25	12	23.10	23.20	23.18		2
	25	25	23.09	23.15	23.15		2
	50	0	23.09	23.14	23.19		2
64QAM	1	0	23.01	23.20	23.48	0-2	2
	1	25	23.04	23.04	23.47		2
	1	49	23.11	23.13	23.45		2
	25	0	22.34	22.37	22.31	0-3	3
	25	12	22.34	22.37	22.29		3
	25	25	22.29	22.33	22.21		3
	50	0	22.20	22.31	22.27		3

© 2019 PCTEST Engineering Laboratory, Inc. All rights reserved. Unless otherwise specified, no part of this report may be reproduced or utilized in any part, form or by any means, electronic or mechanical, including photocopying and microfilm, without permission in writing from PCTEST Engineering Laboratory, Inc. If you have any questions about this international copyright or have an enquiry about obtaining additional rights to this report or assembly of contents thereof, please contact INFO@PCTEST.COM.

Table 8-5
LTE Band 71 (680.5MHz) Conducted Powers – 5MHz Bandwidth

Modulation	RB Size	RB Offset	Low Channel 133147 (665.5 MHz)	Mid Channel 133297 (680.5 MHz)	High Channel 133447 (695.5 MHz)	MPR Allowed per 3GPP [dB]	MPR [dB]
			Conducted Power [dBm]				
QPSK	1	0	25.13	25.27	25.07	0	0
	1	12	25.21	25.36	25.15		0
	1	24	25.32	25.39	25.19		0
	12	0	24.15	24.25	24.16	0-1	1
	12	6	24.30	24.28	24.27		1
	12	13	24.27	24.34	24.26		1
	25	0	24.21	24.28	24.24		1
16QAM	1	0	23.99	24.25	24.06	0-1	1
	1	12	24.00	24.37	24.15		1
	1	24	24.01	24.35	24.13		1
	12	0	23.20	23.22	23.18	0-2	2
	12	6	23.32	23.28	23.27		2
	12	13	23.26	23.34	23.26		2
	25	0	23.28	23.26	23.22		2
64QAM	1	0	23.01	23.04	23.09	0-2	2
	1	12	23.18	23.11	23.05		2
	1	24	23.19	23.12	23.05		2
	12	0	22.16	22.23	22.12	0-3	3
	12	6	22.14	22.26	22.22		3
	12	13	22.30	22.33	22.19		3
	25	0	22.15	22.31	22.23		3

b. LTE Band 12

Table 8-6
LTE Band 12 (707.5MHz) Conducted Powers – 10MHz Bandwidth

Modulation	RB Size	RB Offset	Mid Channel 23095 (707.5 MHz) Conducted Power [dBm]	MPR Allowed per 3GPP [dB]	MPR [dB]
QPSK	1	0	25.14	0	0
	1	25	25.01		0
	1	49	25.11		0
	25	0	24.19	0-1	1
	25	12	24.18		1
	25	25	24.11		1
	50	0	24.16		1
16QAM	1	0	24.18	0-1	1
	1	25	24.03		1
	1	49	24.10		1
	25	0	23.09	0-2	2
	25	12	23.41		2
	25	25	23.29		2
	50	0	23.30		2
64QAM	1	0	23.24	0-2	2
	1	25	23.07		2
	1	49	23.23		2
	25	0	22.22	0-3	3
	25	12	22.21		3
	25	25	22.16		3
	50	0	22.24		3

Note: Since LTE Band 12 at 10MHz bandwidth does not support 3 non-overlapping channels, conducted power measurements were made only on the middle channel.

© 2019 PCTEST Engineering Laboratory, Inc. All rights reserved. Unless otherwise specified, no part of this report may be reproduced or utilized in any part, form or by any means, electronic or mechanical, including photocopying and microfilm, without permission in writing from PCTEST Engineering Laboratory, Inc. If you have any questions about this international copyright or have an enquiry about obtaining additional rights to this report or assembly of contents thereof, please contact INFO@PCTEST.COM.

Table 8-7
LTE Band 12 (707.5MHz) Conducted Powers – 5MHz Bandwidth

Modulation	RB Size	RB Offset	Low Channel 23035 (701.5 MHz)	Mid Channel 23095 (707.5 MHz)	High Channel 23155 (713.5 MHz)	MPR Allowed per 3GPP [dB]	MPR [dB]
			Conducted Power [dBm]				
QPSK	1	0	25.22	25.10	25.33	0	0
	1	12	25.31	25.25	25.38		0
	1	24	25.33	25.20	25.36		0
	12	0	24.15	24.16	24.20	0-1	1
	12	6	24.25	24.28	24.25		1
	12	13	24.23	24.19	24.26		1
	25	0	24.21	24.22	24.19		1
16QAM	1	0	24.22	23.83	23.76	0-1	1
	1	12	24.30	24.04	23.80		1
	1	24	24.32	23.89	23.79		1
	12	0	22.98	23.11	23.03	0-2	2
	12	6	23.37	23.21	23.11		2
	12	13	23.09	23.12	23.11		2
	25	0	23.14	23.08	23.02		2
64QAM	1	0	22.67	22.48	22.61	0-2	2
	1	12	22.58	22.61	22.68		2
	1	24	22.57	22.57	22.62		2
	12	0	22.28	22.26	22.31	0-3	3
	12	6	22.25	22.41	22.37		3
	12	13	22.19	22.28	22.30		3
	25	0	22.22	22.34	22.26		3

Table 8-8
LTE Band 12 (707.5MHz) Conducted Powers – 3MHz Bandwidth

Modulation	RB Size	RB Offset	Low Channel 23025 (700.5 MHz)	Mid Channel 23095 (707.5 MHz)	High Channel 23165 (714.5 MHz)	MPR Allowed per 3GPP [dB]	MPR [dB]
			Conducted Power [dBm]				
QPSK	1	0	25.09	25.22	25.22	0	0
	1	7	25.14	25.30	25.32		0
	1	14	25.18	25.29	25.22		0
	8	0	24.13	24.17	24.15	0-1	1
	8	4	24.22	24.29	24.29		1
	8	7	24.18	24.22	24.23		1
	15	0	24.22	24.22	24.18		1
16QAM	1	0	23.98	24.01	23.98	0-1	1
	1	7	24.01	24.07	23.99		1
	1	14	23.95	24.09	23.88		1
	8	0	23.35	23.42	23.27	0-2	2
	8	4	23.42	23.47	23.35		2
	8	7	23.38	23.45	23.27		2
	15	0	23.32	23.35	23.28		2
64QAM	1	0	23.06	22.97	23.45	0-2	2
	1	7	23.09	23.07	23.46		2
	1	14	23.07	23.02	23.47		2
	8	0	22.18	22.29	22.29	0-3	3
	8	4	22.29	22.40	22.39		3
	8	7	22.22	22.37	22.25		3
	15	0	22.26	22.35	22.27		3

© 2019 PCTEST Engineering Laboratory, Inc. All rights reserved. Unless otherwise specified, no part of this report may be reproduced or utilized in any part, form or by any means, electronic or mechanical, including photocopying and microfilm, without permission in writing from PCTEST Engineering Laboratory, Inc. If you have any questions about this international copyright or have an enquiry about obtaining additional rights to this report or assembly of contents thereof, please contact INFO@PCTEST.COM.

Table 8-9
LTE Band 12 (707.5MHz) Conducted Powers – 1.4MHz Bandwidth

Modulation	RB Size	RB Offset	Low Channel 23017 (699.7 MHz)	Mid Channel 23095 (707.5 MHz)	High Channel 23173 (715.3 MHz)	MPR Allowed per 3GPP [dB]	MPR [dB]
			Conducted Power [dBm]				
QPSK	1	0	25.08	25.22	25.34	0	0
	1	2	25.23	25.31	25.42		0
	1	5	25.09	25.26	25.38		0
	3	0	25.22	25.26	25.23		0
	3	2	25.30	25.33	25.34		0
	3	3	25.21	25.30	25.27		0
	6	0	24.22	24.24	24.21	0-1	1
16QAM	1	0	23.87	24.08	23.93	0-1	1
	1	2	24.01	23.99	24.03		1
	1	5	23.93	23.96	24.02		1
	3	0	23.87	23.98	23.83		1
	3	2	23.93	24.08	24.02		1
	3	3	23.89	23.97	23.94		1
	6	0	23.14	23.12	23.06	0-2	2
64QAM	1	0	23.04	23.01	23.47	0-2	2
	1	2	23.23	23.23	23.50		2
	1	5	23.12	23.04	23.31		2
	3	0	23.15	23.33	23.09		2
	3	2	23.21	23.36	23.14		2
	3	3	23.15	23.34	23.10		2
	6	0	22.25	22.32	22.07	0-3	3

c. LTE Band 13

Table 8-10
LTE Band 13 (782.0MHz) Conducted Powers – 10MHz Bandwidth

Modulation	RB Size	RB Offset	Mid Channel 23230 (782.0 MHz) Conducted Power [dBm]	MPR Allowed per 3GPP [dB]	MPR [dB]
QPSK	1	0	24.93	0	0
	1	25	25.08		0
	1	49	24.79		0
	25	0	24.09	0-1	1
	25	12	24.06		1
	25	25	24.03		1
	50	0	24.03		1
16QAM	1	0	23.99	0-1	1
	1	25	24.02		1
	1	49	23.84		1
	25	0	22.94	0-2	2
	25	12	22.88		2
	25	25	22.84		2
	50	0	22.90		2
64QAM	1	0	22.76	0-2	2
	1	25	23.06		2
	1	49	22.92		2
	25	0	22.07	0-3	3
	25	12	22.03		3
	25	25	21.98		3
	50	0	22.06		3

© 2019 PCTEST Engineering Laboratory, Inc. All rights reserved. Unless otherwise specified, no part of this report may be reproduced or utilized in any part, form or by any means, electronic or mechanical, including photocopying and microfilm, without permission in writing from PCTEST Engineering Laboratory, Inc. If you have any questions about this international copyright or have an enquiry about obtaining additional rights to this report or assembly of contents thereof, please contact INFO@PCTEST.COM.

Table 8-11
LTE Band 13 (782.0MHz) Conducted Powers – 5MHz Bandwidth

Modulation	RB Size	RB Offset	Mid Channel 23230 (782.0 MHz) Conducted Power [dBm]	MPR Allowed per 3GPP [dB]	MPR [dB]
QPSK	1	0	24.90	0	0
	1	12	24.96		0
	1	24	24.96		0
	12	0	24.09	0-1	1
	12	6	24.05		1
	12	13	24.07		1
	25	0	24.06		1
16QAM	1	0	23.93	0-1	1
	1	12	23.96		1
	1	24	23.91		1
	12	0	22.94	0-2	2
	12	6	22.96		2
	12	13	22.97		2
	25	0	22.93		2
64QAM	1	0	22.89	0-2	2
	1	12	22.82		2
	1	24	22.83		2
	12	0	22.01	0-3	3
	12	6	22.01		3
	12	13	22.01		3
	25	0	22.04		3

Note: Since LTE Band 13 at 5MHz bandwidth does not support 3 non-overlapping channels, conducted power measurements were made only on the middle channel.

d. LTE Band 14

Table 8-12
LTE Band 14 (793.0MHz) Conducted Powers – 10MHz Bandwidth

Modulation	RB Size	RB Offset	Mid Channel 23330 (793.0 MHz) Conducted Power [dBm]	MPR Allowed per 3GPP [dB]	MPR [dB]
QPSK	1	0	24.44	0	0
	1	25	24.40		0
	1	49	24.40		0
	25	0	24.09	0-1	1
	25	12	23.99		1
	25	25	23.85		1
	50	0	24.03		1
16QAM	1	0	23.89	0-1	1
	1	25	23.72		1
	1	49	23.88		1
	25	0	22.89	0-2	2
	25	12	22.85		2
	25	25	22.77		2
	50	0	22.82		2
64QAM	1	0	22.61	0-2	2
	1	25	22.60		2
	1	49	22.68		2
	25	0	21.48	0-3	3
	25	12	21.41		3
	25	25	21.40		3
	50	0	21.42		3

© 2019 PCTEST Engineering Laboratory, Inc. All rights reserved. Unless otherwise specified, no part of this report may be reproduced or utilized in any part, form or by any means, electronic or mechanical, including photocopying and microfilm, without permission in writing from PCTEST Engineering Laboratory, Inc. If you have any questions about this international copyright or have an enquiry about obtaining additional rights to this report or assembly of contents thereof, please contact INFO@PCTEST.COM.

Table 8-13
LTE Band 14 (793.0MHz) Conducted Powers – 5MHz Bandwidth

Modulation	RB Size	RB Offset	Mid Channel 23330 (793.0 MHz) Conducted Power [dBm]	MPR Allowed per 3GPP [dB]	MPR [dB]
QPSK	1	0	24.40	0	0
	1	12	24.53		0
	1	24	24.53		0
	12	0	23.91	0-1	1
	12	6	23.99		1
	12	13	23.97		1
	25	0	23.91		1
16QAM	1	0	23.90	0-1	1
	1	12	23.99		1
	1	24	24.01		1
	12	0	22.79	0-2	2
	12	6	22.77		2
	12	13	22.76		2
	25	0	22.73		2
64QAM	1	0	22.24	0-2	2
	1	12	22.33		2
	1	24	22.21		2
	12	0	21.33	0-3	3
	12	6	21.32		3
	12	13	21.29		3
	25	0	21.28		3

Note: Since LTE Band 14 at 5MHz bandwidth does not support 3 non-overlapping channels, conducted power measurements were made only on the middle channel.

e. LTE Band 26

Table 8-14
LTE Band 26 (831.5MHz) Conducted Powers – 15MHz Bandwidth

Modulation	RB Size	RB Offset	Mid Channel 26865 (831.5 MHz) Conducted Power [dBm]	MPR Allowed per 3GPP [dB]	MPR [dB]
QPSK	1	0	25.08	0	0
	1	36	25.06		0
	1	74	25.09		0
	36	0	24.17	0-1	1
	36	18	24.07		1
	36	37	23.99		1
	75	0	24.06		1
16QAM	1	0	24.03	0-1	1
	1	36	24.06		1
	1	74	24.17		1
	36	0	23.21	0-2	2
	36	18	23.19		2
	36	37	23.20		2
	75	0	23.12		2
64QAM	1	0	23.05	0-2	2
	1	36	22.88		2
	1	74	23.13		2
	36	0	21.81	0-3	3
	36	18	21.93		3
	36	37	21.81		3
	75	0	21.85		3

Note: Since LTE Band 26 at 15MHz bandwidth does not support 3 non-overlapping channels, conducted power measurements were made only on the middle channel.

© 2019 PCTEST Engineering Laboratory, Inc. All rights reserved. Unless otherwise specified, no part of this report may be reproduced or utilized in any part, form or by any means, electronic or mechanical, including photocopying and microfilm, without permission in writing from PCTEST Engineering Laboratory, Inc. If you have any questions about this international copyright or have an enquiry about obtaining additional rights to this report or assembly of contents thereof, please contact INFO@PCTEST.COM.

Table 8-15
LTE Band 26 (831.5MHz) Conducted Powers – 10MHz Bandwidth

Modulation	RB Size	RB Offset	Low Channel 26740 (819.0 MHz)	Mid Channel 26865 (831.5 MHz)	High Channel 26990 (844.0 MHz)	MPR Allowed per 3GPP [dB]	MPR [dB]
			Conducted Power [dBm]				
QPSK	1	0	24.95	25.08	25.18	0	0
	1	25	25.01	25.14	25.09		0
	1	49	24.99	25.02	25.00		0
	25	0	24.11	24.16	24.18	0-1	1
	25	12	24.15	24.25	24.22		1
	25	25	24.09	24.20	24.20		1
	50	0	24.12	24.17	24.21		1
16QAM	1	0	24.34	24.21	24.39	0-1	1
	1	25	24.31	24.16	24.33		1
	1	49	24.37	24.15	24.50		1
	25	0	23.24	23.32	23.29	0-2	2
	25	12	23.25	23.37	23.34		2
	25	25	23.23	23.30	23.25		2
	50	0	23.30	23.35	23.29		2
64QAM	1	0	22.63	23.43	23.50	0-2	2
	1	25	22.86	23.19	23.04		2
	1	49	23.06	23.38	22.92		2
	25	0	21.50	22.07	21.92	0-3	3
	25	12	21.68	22.01	21.65		3
	25	25	21.88	22.05	21.54		3
	50	0	21.62	21.98	21.73		3

Table 8-16
LTE Band 26 (831.5MHz) Conducted Powers – 5MHz Bandwidth

Modulation	RB Size	RB Offset	Low Channel 26715 (816.5 MHz)	Mid Channel 26865 (831.5 MHz)	High Channel 27015 (846.5 MHz)	MPR Allowed per 3GPP [dB]	MPR [dB]
			Conducted Power [dBm]				
QPSK	1	0	24.97	25.05	25.06	0	0
	1	12	25.04	25.13	25.05		0
	1	24	25.07	25.07	25.00		0
	12	0	24.10	24.14	24.12	0-1	1
	12	6	24.18	24.18	24.16		1
	12	13	24.14	24.22	24.14		1
	25	0	24.09	24.10	24.11		1
16QAM	1	0	23.98	24.28	24.07	0-1	1
	1	12	24.06	24.32	24.10		1
	1	24	24.13	24.29	24.00		1
	12	0	22.76	22.88	22.87	0-2	2
	12	6	22.85	22.95	22.97		2
	12	13	22.80	22.94	22.88		2
	25	0	23.31	23.24	23.24		2
64QAM	1	0	22.60	22.73	22.61	0-2	2
	1	12	22.67	22.74	22.63		2
	1	24	22.72	22.76	22.55		2
	12	0	21.41	21.96	21.51	0-3	3
	12	6	21.49	21.98	21.56		3
	12	13	21.56	21.94	21.55		3
	25	0	21.42	21.80	21.43		3

© 2019 PCTEST Engineering Laboratory, Inc. All rights reserved. Unless otherwise specified, no part of this report may be reproduced or utilized in any part, form or by any means, electronic or mechanical, including photocopying and microfilm, without permission in writing from PCTEST Engineering Laboratory, Inc. If you have any questions about this international copyright or have an enquiry about obtaining additional rights to this report or assembly of contents thereof, please contact INFO@PCTEST.COM.

Table 8-17
LTE Band 26 (831.5MHz) Conducted Powers – 3MHz Bandwidth

Modulation	RB Size	RB Offset	Low Channel 26705 (815.5 MHz)	Mid Channel 26865 (831.5 MHz)	High Channel 27025 (847.5 MHz)	MPR Allowed per 3GPP [dB]	MPR [dB]
			Conducted Power [dBm]				
QPSK	1	0	24.99	25.13	25.14	0	0
	1	7	25.00	25.16	25.06		0
	1	14	25.00	25.17	25.09		0
	8	0	24.08	24.13	24.14	0-1	1
	8	4	24.13	24.22	24.15		1
	8	7	24.12	24.15	24.11		1
	15	0	24.13	24.13	24.13		1
16QAM	1	0	24.13	24.12	24.46	0-1	1
	1	7	24.18	24.12	24.43		1
	1	14	24.17	24.17	24.38		1
	8	0	23.09	22.93	22.98	0-2	2
	8	4	23.22	23.05	23.02		2
	8	7	23.12	23.01	22.98		2
	15	0	23.10	23.11	23.16		2
64QAM	1	0	22.41	23.24	23.03	0-2	2
	1	7	22.47	23.15	23.03		2
	1	14	22.54	23.18	23.00		2
	8	0	21.42	21.96	21.72	0-3	3
	8	4	21.51	22.00	21.76		3
	8	7	21.49	21.97	21.74		3
	15	0	21.36	21.95	21.55		3

Table 8-18
LTE Band 26 (831.5MHz) Conducted Powers – 1.4MHz Bandwidth

Modulation	RB Size	RB Offset	Low Channel 26697 (814.7 MHz)	Mid Channel 26865 (831.5 MHz)	High Channel 27033 (848.3 MHz)	MPR Allowed per 3GPP [dB]	MPR [dB]
			Conducted Power [dBm]				
QPSK	1	0	24.99	25.14	25.00	0	0
	1	2	25.06	25.18	25.13		0
	1	5	25.03	25.17	24.98		0
	3	0	24.98	25.07	25.03		0
	3	2	25.06	25.18	25.11		0
	3	3	25.00	25.13	25.06		0
	6	0	24.03	24.09	24.03	0-1	1
16QAM	1	0	24.28	24.44	24.29	0-1	1
	1	2	24.33	24.48	24.39		1
	1	5	24.32	24.41	24.26		1
	3	0	23.94	24.39	24.35		1
	3	2	24.00	24.43	24.38		1
	3	3	23.98	24.39	24.33		1
	6	0	23.06	23.50	23.50	0-2	2
64QAM	1	0	22.63	23.45	22.64	0-2	2
	1	2	22.69	23.47	22.67		2
	1	5	22.68	23.42	22.68		2
	3	0	22.64	22.82	22.75		2
	3	2	22.57	22.85	22.59		2
	3	3	22.56	22.82	22.59		2
	6	0	21.47	22.03	21.68	0-3	3

© 2019 PCTEST Engineering Laboratory, Inc. All rights reserved. Unless otherwise specified, no part of this report may be reproduced or utilized in any part, form or by any means, electronic or mechanical, including photocopying and microfilm, without permission in writing from PCTEST Engineering Laboratory, Inc. If you have any questions about this international copyright or have an enquiry about obtaining additional rights to this report or assembly of contents thereof, please contact INFO@PCTEST.COM.

f. LTE Band 5

Table 8-19
LTE Band 5 (836.5MHz) Conducted Powers – 10MHz Bandwidth

Modulation	RB Size	RB Offset	Mid Channel 20525 (836.5 MHz) Conducted Power [dBm]	MPR Allowed per 3GPP [dB]	MPR [dB]
QPSK	1	0	24.96	0	0
	1	25	25.04		0
	1	49	24.92		0
	25	0	23.98	0-1	1
	25	12	24.03		1
	25	25	23.97		1
	50	0	23.99		1
16QAM	1	0	23.93	0-1	1
	1	25	23.96		1
	1	49	23.87		1
	25	0	22.93	0-2	2
	25	12	22.91		2
	25	25	22.82		2
	50	0	22.90		2
64QAM	1	0	22.97	0-2	2
	1	25	23.28		2
	1	49	22.73		2
	25	0	21.85	0-3	3
	25	12	22.13		3
	25	25	21.94		3
	50	0	21.80		3

Note: Since LTE Band 5 at 10MHz bandwidth does not support 3 non-overlapping channels, conducted power measurements were made only on the middle channel.

Table 8-20
LTE Band 5 (836.5MHz) Conducted Powers – 5MHz Bandwidth

Modulation	RB Size	RB Offset	Low Channel 20425 (826.5 MHz)	Mid Channel 20525 (836.5 MHz)	High Channel 20625 (846.5 MHz)	MPR Allowed per 3GPP [dB]	MPR [dB]
			Conducted Power [dBm]				
QPSK	1	0	24.98	25.08	25.08	0	0
	1	12	25.07	25.17	25.14		0
	1	24	25.06	25.15	25.20		0
	12	0	24.09	24.18	24.16	0-1	1
	12	6	24.21	24.22	24.24		1
	12	13	24.21	24.31	24.29		1
	25	0	24.18	24.19	24.20		1
16QAM	1	0	23.92	24.24	24.01	0-1	1
	1	12	23.99	24.33	24.09		1
	1	24	24.01	24.32	24.03		1
	12	0	22.94	23.14	23.12	0-2	2
	12	6	23.11	23.18	23.16		2
	12	13	23.12	23.21	23.24		2
	25	0	23.17	23.11	23.15		2
64QAM	1	0	22.68	22.76	22.65	0-2	2
	1	12	22.75	22.83	22.68		2
	1	24	22.77	22.86	22.63		2
	12	0	22.06	22.16	21.60	0-3	3
	12	6	22.14	22.28	21.65		3
	12	13	22.15	22.31	21.66		3
	25	0	22.08	22.09	21.49		3

© 2019 PCTEST Engineering Laboratory, Inc. All rights reserved. Unless otherwise specified, no part of this report may be reproduced or utilized in any part, form or by any means, electronic or mechanical, including photocopying and microfilm, without permission in writing from PCTEST Engineering Laboratory, Inc. If you have any questions about this international copyright or have an enquiry about obtaining additional rights to this report or assembly of contents thereof, please contact INFO@PCTEST.COM.

Table 8-21
LTE Band 5 (836.5MHz) Conducted Powers – 3MHz Bandwidth

Modulation	RB Size	RB Offset	Low Channel 20415 (825.5 MHz)	Mid Channel 20525 (836.5 MHz)	High Channel 20635 (847.5 MHz)	MPR Allowed per 3GPP [dB]	MPR [dB]
			Conducted Power [dBm]				
QPSK	1	0	24.97	25.14	25.10	0	0
	1	7	25.06	25.20	25.18		0
	1	14	25.11	25.28	25.23		0
	8	0	24.07	24.19	24.20	0-1	1
	8	4	24.17	24.27	24.29		1
	8	7	24.20	24.29	24.28		1
	15	0	24.18	24.24	24.19		1
16QAM	1	0	23.97	23.91	24.23	0-1	1
	1	7	24.04	23.96	24.31		1
	1	14	24.13	24.08	24.40		1
	8	0	23.11	23.02	23.05	0-2	2
	8	4	23.21	23.09	23.19		2
	8	7	23.21	23.11	23.14		2
	15	0	23.14	23.18	23.23		2
64QAM	1	0	22.91	23.16	23.12	0-2	2
	1	7	22.81	23.17	23.12		2
	1	14	23.10	23.18	23.09		2
	8	0	22.09	22.21	21.81	0-3	3
	8	4	22.11	22.30	21.81		3
	8	7	22.09	22.34	21.79		3
	15	0	22.05	22.24	21.62		3

Table 8-22
LTE Band 5 (836.5MHz) Conducted Powers – 1.4MHz Bandwidth

Modulation	RB Size	RB Offset	Low Channel 20407 (824.7 MHz)	Mid Channel 20525 (836.5 MHz)	High Channel 20643 (848.3 MHz)	MPR Allowed per 3GPP [dB]	MPR [dB]
			Conducted Power [dBm]				
QPSK	1	0	24.97	25.11	25.11	0	0
	1	2	25.08	25.22	25.20		0
	1	5	25.02	25.20	25.16		0
	3	0	25.07	25.18	25.14		0
	3	2	25.12	25.31	25.24		0
	3	3	25.10	25.28	25.20		0
	6	0	24.09	24.11	24.19	0-1	1
16QAM	1	0	24.25	24.18	24.37	0-1	1
	1	2	24.37	24.31	24.44		1
	1	5	24.33	24.33	24.42		1
	3	0	24.08	23.90	24.19		1
	3	2	24.10	23.99	24.24		1
	3	3	24.12	23.97	24.19		1
	6	0	23.19	22.94	23.31	0-2	2
64QAM	1	0	22.98	23.11	22.49	0-2	2
	1	2	23.12	23.15	22.52		2
	1	5	22.88	23.14	22.52		2
	3	0	23.20	23.16	22.59		2
	3	2	23.13	23.21	22.63		2
	3	3	23.08	23.21	22.64		2
	6	0	22.25	22.14	21.74	0-3	3

© 2019 PCTEST Engineering Laboratory, Inc. All rights reserved. Unless otherwise specified, no part of this report may be reproduced or utilized in any part, form or by any means, electronic or mechanical, including photocopying and microfilm, without permission in writing from PCTEST Engineering Laboratory, Inc. If you have any questions about this international copyright or have an enquiry about obtaining additional rights to this report or assembly of contents thereof, please contact INFO@PCTEST.COM.

g. LTE Band 66

Table 8-23
LTE Band 66 (1745.0MHz) Conducted Powers – 20MHz Bandwidth

Modulation	RB Size	RB Offset	Low Channel 132072 (1720.0 MHz)	Mid Channel 132322 (1745.0 MHz)	High Channel 132572 (1770.0 MHz)	MPR Allowed per 3GPP [dB]	MPR [dB]
			Conducted Power [dBm]				
QPSK	1	0	24.85	24.90	24.83	0	0
	1	50	24.73	24.77	24.75		0
	1	99	24.67	24.52	24.48		0
	50	0	23.82	23.78	23.74	0-1	1
	50	25	23.77	23.75	23.66		1
	50	50	23.67	23.70	23.64		1
	100	0	23.74	23.70	23.71		1
16QAM	1	0	23.89	23.84	23.87	0-1	1
	1	50	23.90	23.73	23.71		1
	1	99	23.92	23.70	23.63		1
	50	0	23.00	22.76	22.95	0-2	2
	50	25	22.84	22.71	22.96		2
	50	50	22.87	22.60	22.94		2
	100	0	22.89	22.69	22.99		2
64QAM	1	0	22.64	22.73	22.84	0-2	2
	1	50	22.72	22.88	22.72		2
	1	99	22.75	22.59	22.55		2
	50	0	21.72	21.81	21.98	0-3	3
	50	25	21.67	21.75	21.81		3
	50	50	21.58	21.73	21.22		3
	100	0	21.67	21.73	21.70		3

Table 8-24
LTE Band 66 (1745.0MHz) Conducted Powers – 15MHz Bandwidth

Modulation	RB Size	RB Offset	Low Channel 132047 (1717.5 MHz)	Mid Channel 132322 (1745.0 MHz)	High Channel 132597 (1772.5 MHz)	MPR Allowed per 3GPP [dB]	MPR [dB]
			Conducted Power [dBm]				
QPSK	1	0	25.00	24.93	24.98	0	0
	1	36	24.97	24.91	24.90		0
	1	74	24.86	24.95	24.72		0
	36	0	23.93	23.98	23.57	0-1	1
	36	18	23.92	23.98	23.53		1
	36	37	23.93	23.95	23.43		1
	75	0	23.97	23.92	23.51		1
16QAM	1	0	23.89	23.59	23.93	0-1	1
	1	36	23.87	23.50	23.89		1
	1	74	23.67	23.46	23.80		1
	36	0	22.97	22.92	22.91	0-2	2
	36	18	22.95	22.98	22.87		2
	36	37	22.97	22.90	22.96		2
	75	0	22.97	22.96	22.86		2
64QAM	1	0	22.77	22.98	22.95	0-2	2
	1	36	22.73	22.99	22.88		2
	1	74	22.58	22.99	22.84		2
	36	0	22.00	22.00	21.95	0-3	3
	36	18	21.96	21.98	21.86		3
	36	37	21.93	21.89	21.58		3
	75	0	21.83	21.50	21.90		3

© 2019 PCTEST Engineering Laboratory, Inc. All rights reserved. Unless otherwise specified, no part of this report may be reproduced or utilized in any part, form or by any means, electronic or mechanical, including photocopying and microfilm, without permission in writing from PCTEST Engineering Laboratory, Inc. If you have any questions about this international copyright or have an enquiry about obtaining additional rights to this report or assembly of contents thereof, please contact INFO@PCTEST.COM.

Table 8-25
LTE Band 66 (1745.0MHz) Conducted Powers – 10MHz Bandwidth

Modulation	RB Size	RB Offset	Low Channel 132022 (1715.0 MHz)	Mid Channel 132322 (1745.0 MHz)	High Channel 132622 (1775.0 MHz)	MPR Allowed per 3GPP [dB]	MPR [dB]
			Conducted Power [dBm]				
QPSK	1	0	24.84	24.99	24.94	0	0
	1	25	24.82	24.92	24.96		0
	1	49	24.99	24.99	24.78		0
	25	0	23.93	23.99	23.99	0-1	1
	25	12	23.90	23.95	23.93		1
	25	25	23.97	23.92	23.78		1
	50	0	23.90	23.95	23.95		1
16QAM	1	0	23.93	23.54	23.78	0-1	1
	1	25	23.92	23.56	23.78		1
	1	49	23.93	23.59	23.88		1
	25	0	22.94	23.00	22.85	0-2	2
	25	12	22.92	22.96	22.82		2
	25	25	22.88	22.87	22.80		2
	50	0	22.89	22.87	22.89		2
64QAM	1	0	22.97	22.83	22.80	0-2	2
	1	25	22.91	22.77	22.90		2
	1	49	22.91	22.85	22.62		2
	25	0	22.00	21.99	21.94	0-3	3
	25	12	21.93	21.99	21.63		3
	25	25	21.98	21.90	21.27		3
	50	0	21.93	21.94	21.55		3

Table 8-26
LTE Band 66 (1745.0MHz) Conducted Powers – 5MHz Bandwidth

Modulation	RB Size	RB Offset	Low Channel 131997 (1712.5 MHz)	Mid Channel 132322 (1745.0 MHz)	High Channel 132647 (1777.5 MHz)	MPR Allowed per 3GPP [dB]	MPR [dB]
			Conducted Power [dBm]				
QPSK	1	0	24.93	24.84	24.98	0	0
	1	12	24.88	24.97	24.75		0
	1	24	24.88	25.00	24.62		0
	12	0	23.81	23.88	23.95	0-1	1
	12	6	23.87	23.88	23.85		1
	12	13	23.83	23.89	23.92		1
	25	0	23.81	23.84	23.91		1
16QAM	1	0	23.69	23.81	24.00	0-1	1
	1	12	23.82	23.94	23.90		1
	1	24	23.85	23.90	23.74		1
	12	0	22.93	22.83	22.94	0-2	2
	12	6	22.97	22.93	22.98		2
	12	13	22.98	22.95	23.00		2
	25	0	22.91	22.75	23.00		2
64QAM	1	0	22.70	22.80	22.85	0-2	2
	1	12	22.80	22.70	22.79		2
	1	24	22.86	22.74	22.63		2
	12	0	21.89	21.89	21.85	0-3	3
	12	6	21.94	21.80	21.73		3
	12	13	21.88	21.88	21.54		3
	25	0	21.85	21.71	21.68		3

© 2019 PCTEST Engineering Laboratory, Inc. All rights reserved. Unless otherwise specified, no part of this report may be reproduced or utilized in any part, form or by any means, electronic or mechanical, including photocopying and microfilm, without permission in writing from PCTEST Engineering Laboratory, Inc. If you have any questions about this international copyright or have an enquiry about obtaining additional rights to this report or assembly of contents thereof, please contact INFO@PCTEST.COM.

Table 8-27
LTE Band 66 (1745.0MHz) Conducted Powers – 3MHz Bandwidth

Modulation	RB Size	RB Offset	Low Channel 131987 (1711.5 MHz)	Mid Channel 132322 (1745.0 MHz)	High Channel 132657 (1778.5 MHz)	MPR Allowed per 3GPP [dB]	MPR [dB]
			Conducted Power [dBm]				
QPSK	1	0	24.84	24.83	24.90	0	0
	1	7	24.90	24.91	24.76		0
	1	14	24.96	24.87	24.72		0
	8	0	23.92	23.77	23.73	0-1	1
	8	4	23.91	23.83	23.71		1
	8	7	23.99	23.87	23.67		1
	15	0	23.83	24.00	23.98		1
16QAM	1	0	23.94	23.61	23.99	0-1	1
	1	7	23.81	23.67	24.00		1
	1	14	23.83	23.63	23.92		1
	8	0	22.84	22.78	22.93	0-2	2
	8	4	22.81	22.92	22.91		2
	8	7	22.81	22.82	22.87		2
	15	0	22.98	22.93	22.93		2
64QAM	1	0	22.83	22.75	23.00	0-2	2
	1	7	22.85	22.82	22.96		2
	1	14	22.86	22.81	22.91		2
	8	0	21.90	21.76	21.68	0-3	3
	8	4	21.98	21.84	21.65		3
	8	7	21.94	21.80	21.59		3
	15	0	21.98	21.75	21.56		3

Table 8-28
LTE Band 66 (1745.0MHz) Conducted Powers – 1.4MHz Bandwidth

Modulation	RB Size	RB Offset	Low Channel 131979 (1710.7 MHz)	Mid Channel 132322 (1745.0 MHz)	High Channel 132665 (1779.3 MHz)	MPR Allowed per 3GPP [dB]	MPR [dB]
			Conducted Power [dBm]				
QPSK	1	0	24.88	24.87	24.68	0	0
	1	2	25.00	24.92	24.72		0
	1	5	24.91	24.86	24.64		0
	3	0	24.92	24.79	24.79		0
	3	2	25.00	24.82	24.86		0
	3	3	24.97	24.77	24.83		0
	6	0	24.00	23.81	23.93	0-1	1
16QAM	1	0	23.69	23.83	23.99	0-1	1
	1	2	23.72	23.93	24.00		1
	1	5	23.70	23.91	23.99		1
	3	0	23.85	23.91	23.89		1
	3	2	23.93	23.86	23.90		1
	3	3	23.96	23.83	23.86		1
	6	0	22.97	23.00	22.93	0-2	2
64QAM	1	0	22.71	23.00	22.80	0-2	2
	1	2	22.93	22.98	22.85		2
	1	5	22.73	22.92	22.71		2
	3	0	22.98	22.86	22.71		2
	3	2	22.95	22.77	22.86		2
	3	3	22.92	22.81	22.77		2
	6	0	21.95	22.00	21.87	0-3	3

© 2019 PCTEST Engineering Laboratory, Inc. All rights reserved. Unless otherwise specified, no part of this report may be reproduced or utilized in any part, form or by any means, electronic or mechanical, including photocopying and microfilm, without permission in writing from PCTEST Engineering Laboratory, Inc. If you have any questions about this international copyright or have an enquiry about obtaining additional rights to this report or assembly of contents thereof, please contact INFO@PCTEST.COM.

h. LTE Band 25

Table 8-29
LTE Band 25 (1882.5MHz) Conducted Powers – 20MHz Bandwidth

Modulation	RB Size	RB Offset	Low Channel 26140 (1860.0 MHz)	Mid Channel 26365 (1882.5 MHz)	High Channel 26590 (1905.0 MHz)	MPR Allowed per 3GPP [dB]	MPR [dB]
			Conducted Power [dBm]				
QPSK	1	0	24.19	24.20	24.19	0	0
	1	50	24.09	24.18	24.04		0
	1	99	24.05	24.09	24.08		0
	50	0	23.06	23.10	23.08	0-1	1
	50	25	23.06	23.11	23.08		1
	50	50	23.07	23.10	23.10		1
	100	0	23.05	23.09	23.07		1
16QAM	1	0	23.03	23.15	23.17	0-1	1
	1	50	23.17	23.00	23.16		1
	1	99	23.14	22.89	23.14		1
	50	0	21.93	22.03	21.95	0-2	2
	50	25	21.96	22.04	21.98		2
	50	50	21.94	22.01	21.96		2
	100	0	21.98	22.03	21.97		2
64QAM	1	0	22.17	22.20	21.98	0-2	2
	1	50	22.07	22.15	21.94		2
	1	99	22.12	22.19	21.95		2
	50	0	21.13	21.18	21.14	0-3	3
	50	25	21.20	21.20	21.19		3
	50	50	21.19	21.18	21.20		3
	100	0	21.15	21.18	21.20		3

Table 8-30
LTE Band 25 (1882.5MHz) Conducted Powers – 15MHz Bandwidth

Modulation	RB Size	RB Offset	Low Channel 26115 (1857.5 MHz)	Mid Channel 26365 (1882.5 MHz)	High Channel 26615 (1907.5 MHz)	MPR Allowed per 3GPP [dB]	MPR [dB]
			Conducted Power [dBm]				
QPSK	1	0	24.01	24.12	24.11	0	0
	1	36	24.19	24.11	24.12		0
	1	74	24.09	24.20	24.15		0
	36	0	23.16	23.11	23.16	0-1	1
	36	18	23.00	23.12	23.20		1
	36	37	23.14	23.11	23.18		1
	75	0	23.17	23.15	23.17		1
16QAM	1	0	22.81	22.85	22.96	0-1	1
	1	36	22.96	22.88	23.04		1
	1	74	22.90	22.83	22.95		1
	36	0	22.09	22.04	22.09	0-2	2
	36	18	22.14	22.10	22.17		2
	36	37	22.12	22.09	22.16		2
	75	0	22.03	22.14	22.11		2
64QAM	1	0	22.02	22.14	22.10	0-2	2
	1	36	21.96	22.17	22.18		2
	1	74	21.83	22.18	22.08		2
	36	0	21.12	21.06	21.07	0-3	3
	36	18	21.13	21.09	21.17		3
	36	37	21.11	21.08	21.15		3
	75	0	21.04	21.14	21.12		3

© 2019 PCTEST Engineering Laboratory, Inc. All rights reserved. Unless otherwise specified, no part of this report may be reproduced or utilized in any part, form or by any means, electronic or mechanical, including photocopying and microfilm, without permission in writing from PCTEST Engineering Laboratory, Inc. If you have any questions about this international copyright or have an enquiry about obtaining additional rights to this report or assembly of contents thereof, please contact INFO@PCTEST.COM.

Table 8-31
LTE Band 25 (1882.5MHz) Conducted Powers – 10MHz Bandwidth

Modulation	RB Size	RB Offset	Low Channel 26090 (1855.0 MHz)	Mid Channel 26365 (1882.5 MHz)	High Channel 26640 (1910.0 MHz)	MPR Allowed per 3GPP [dB]	MPR [dB]
			Conducted Power [dBm]				
QPSK	1	0	23.99	24.03	23.89	0	0
	1	25	23.90	23.90	23.82		0
	1	49	23.85	23.99	23.99		0
	25	0	23.02	22.96	22.94	0-1	1
	25	12	23.03	22.99	22.95		1
	25	25	23.03	22.98	23.01		1
	50	0	23.00	22.96	22.95		1
16QAM	1	0	22.84	22.88	22.91	0-1	1
	1	25	22.77	22.78	22.84		1
	1	49	22.77	22.82	22.83		1
	25	0	21.92	21.95	21.93	0-2	2
	25	12	21.93	21.93	21.91		2
	25	25	21.94	21.96	21.94		2
	50	0	21.87	21.91	21.91		2
64QAM	1	0	22.07	22.04	22.00	0-2	2
	1	25	22.01	22.12	22.08		2
	1	49	21.88	22.08	21.98		2
	25	0	21.07	21.01	20.87	0-3	3
	25	12	21.08	21.04	20.89		3
	25	25	21.10	21.03	20.96		3
	50	0	21.00	21.04	21.00		3

Table 8-32
LTE Band 25 (1882.5MHz) Conducted Powers – 5MHz Bandwidth

Modulation	RB Size	RB Offset	Low Channel 26065 (1852.5 MHz)	Mid Channel 26365 (1882.5 MHz)	High Channel 26665 (1912.5 MHz)	MPR Allowed per 3GPP [dB]	MPR [dB]
			Conducted Power [dBm]				
QPSK	1	0	24.05	23.76	23.90	0	0
	1	12	24.15	23.88	24.04		0
	1	24	24.20	23.94	24.04		0
	12	0	23.00	22.93	22.94	0-1	1
	12	6	23.07	22.95	22.99		1
	12	13	23.07	23.01	23.08		1
	25	0	23.09	22.98	23.01		1
16QAM	1	0	22.82	22.80	23.03	0-1	1
	1	12	22.93	22.96	22.99		1
	1	24	22.91	22.87	22.98		1
	12	0	21.76	21.61	21.69	0-2	2
	12	6	21.84	21.70	21.73		2
	12	13	21.84	21.78	21.76		2
	25	0	22.16	22.14	22.14		2
64QAM	1	0	21.52	21.85	21.92	0-2	2
	1	12	21.46	21.91	21.90		2
	1	24	21.51	21.98	21.80		2
	12	0	21.10	20.86	21.05	0-3	3
	12	6	21.06	20.84	21.13		3
	12	13	20.97	20.92	21.14		3
	25	0	20.74	20.85	21.10		3

© 2019 PCTEST Engineering Laboratory, Inc. All rights reserved. Unless otherwise specified, no part of this report may be reproduced or utilized in any part, form or by any means, electronic or mechanical, including photocopying and microfilm, without permission in writing from PCTEST Engineering Laboratory, Inc. If you have any questions about this international copyright or have an enquiry about obtaining additional rights to this report or assembly of contents thereof, please contact INFO@PCTEST.COM.

Table 8-33
LTE Band 25 (1882.5MHz) Conducted Powers – 3MHz Bandwidth

Modulation	RB Size	RB Offset	Low Channel 26055 (1851.5 MHz)	Mid Channel 26365 (1882.5 MHz)	High Channel 26675 (1913.5 MHz)	MPR Allowed per 3GPP [dB]	MPR [dB]
			Conducted Power [dBm]				
QPSK	1	0	23.92	23.86	23.81	0	0
	1	7	23.97	23.97	23.93		0
	1	14	24.02	23.98	23.96		0
	8	0	23.05	22.86	22.87	0-1	1
	8	4	23.09	23.05	22.97		1
	8	7	23.09	22.95	23.04		1
	15	0	23.08	22.97	22.94		1
16QAM	1	0	22.86	22.85	22.70	0-1	1
	1	7	22.94	22.98	22.87		1
	1	14	22.97	22.92	22.84		1
	8	0	21.87	21.69	21.90	0-2	2
	8	4	21.91	21.80	21.94		2
	8	7	21.86	21.75	21.99		2
	15	0	21.97	21.91	21.93		2
64QAM	1	0	22.00	22.07	22.00	0-2	2
	1	7	21.98	22.02	22.04		2
	1	14	21.90	22.13	22.11		2
	8	0	21.20	21.16	21.15	0-3	3
	8	4	21.15	21.19	21.04		3
	8	7	21.05	21.18	21.00		3
	15	0	21.00	21.10	20.85		3

Table 8-34
LTE Band 25 (1882.5MHz) Conducted Powers – 1.4MHz Bandwidth

Modulation	RB Size	RB Offset	Low Channel 26047 (1850.7 MHz)	Mid Channel 26365 (1882.5 MHz)	High Channel 26683 (1914.3 MHz)	MPR Allowed per 3GPP [dB]	MPR [dB]
			Conducted Power [dBm]				
QPSK	1	0	23.95	24.06	23.75	0	0
	1	2	24.06	24.13	23.87		0
	1	5	23.98	24.04	23.85		0
	3	0	24.04	23.94	23.85		0
	3	2	24.05	24.03	23.97		0
	3	3	24.07	23.94	23.97		0
	6	0	22.97	22.93	22.89	0-1	1
16QAM	1	0	22.94	22.77	22.73	0-1	1
	1	2	23.05	22.84	22.81		1
	1	5	22.98	22.79	22.84		1
	3	0	22.82	22.71	22.62		1
	3	2	22.88	22.80	22.68		1
	3	3	22.84	22.75	22.68		1
	6	0	21.83	21.75	21.76	0-2	2
64QAM	1	0	21.82	22.14	22.10	0-2	2
	1	2	21.87	22.17	22.18		2
	1	5	21.89	22.18	22.08		2
	3	0	21.52	21.57	21.60		2
	3	2	21.53	21.60	21.67		2
	3	3	21.52	21.59	21.67		2
	6	0	20.54	21.14	21.12	0-3	3

© 2019 PCTEST Engineering Laboratory, Inc. All rights reserved. Unless otherwise specified, no part of this report may be reproduced or utilized in any part, form or by any means, electronic or mechanical, including photocopying and microfilm, without permission in writing from PCTEST Engineering Laboratory, Inc. If you have any questions about this international copyright or have an enquiry about obtaining additional rights to this report or assembly of contents thereof, please contact INFO@PCTEST.COM.

i. LTE Band 30

Table 8-35
LTE Band 30 (2310.0MHz) Conducted Powers – 10MHz Bandwidth

Modulation	RB Size	RB Offset	Mid Channel 27710 (2310.0 MHz) Conducted Power [dBm]	MPR Allowed per 3GPP [dB]	MPR [dB]
QPSK	1	0	23.20	0	0
	1	25	23.37		0
	1	49	23.27		0
	25	0	22.33	0-1	1
	25	12	22.35		1
	25	25	22.24		1
	50	0	22.34		1
16QAM	1	0	22.36	0-1	1
	1	25	22.37		1
	1	49	22.43		1
	25	0	21.27	0-2	2
	25	12	21.24		2
	25	25	21.20		2
	50	0	21.22		2
64QAM	1	0	21.44	0-2	2
	1	25	21.65		2
	1	49	21.42		2
	25	0	20.47	0-3	3
	25	12	20.37		3
	25	25	20.36		3
	50	0	20.36		3

Table 8-36
LTE Band 30 (2310.0MHz) Conducted Powers – 5MHz Bandwidth

Modulation	RB Size	RB Offset	Mid Channel 27710 (2310.0 MHz) Conducted Power [dBm]	MPR Allowed per 3GPP [dB]	MPR [dB]
QPSK	1	0	23.25	0	0
	1	12	23.38		0
	1	24	23.28		0
	12	0	22.31	0-1	1
	12	6	22.34		1
	12	13	22.33		1
	25	0	22.33		1
16QAM	1	0	22.10	0-1	1
	1	12	22.23		1
	1	24	22.13		1
	12	0	21.11	0-2	2
	12	6	21.12		2
	12	13	21.10		2
	25	0	21.04		2
64QAM	1	0	20.98	0-2	2
	1	12	21.14		2
	1	24	21.03		2
	12	0	20.40	0-3	3
	12	6	20.42		3
	12	13	20.42		3
	25	0	20.31		3

Note: Since LTE Band 30 at 5MHz bandwidth does not support 3 non-overlapping channels, conducted power measurements were made only on the middle channel.

© 2019 PCTEST Engineering Laboratory, Inc. All rights reserved. Unless otherwise specified, no part of this report may be reproduced or utilized in any part, form or by any means, electronic or mechanical, including photocopying and microfilm, without permission in writing from PCTEST Engineering Laboratory, Inc. If you have any questions about this international copyright or have an enquiry about obtaining additional rights to this report or assembly of contents thereof, please contact INFO@PCTEST.COM.

j. LTE Band 7

Table 8-37
LTE Band 7 (2535.0MHz) Conducted Powers – 20MHz Bandwidth

Modulation	RB Size	RB Offset	Low Channel 20850 (2510.0 MHz)	Mid Channel 21100 (2535.0 MHz)	High Channel 21350 (2560.0 MHz)	MPR Allowed per 3GPP [dB]	MPR [dB]
			Conducted Power [dBm]				
QPSK	1	0	23.50	23.40	23.43	0	0
	1	50	23.51	23.21	23.15		0
	1	99	23.44	23.24	23.18		0
	50	0	22.48	22.37	22.29	0-1	1
	50	25	22.52	22.27	22.32		1
	50	50	22.51	22.27	22.19		1
	100	0	22.46	22.34	22.27		1
16QAM	1	0	22.40	22.28	22.15	0-1	1
	1	50	22.36	22.37	22.25		1
	1	99	22.14	22.04	22.20		1
	50	0	21.40	21.30	21.28	0-2	2
	50	25	21.41	21.25	21.17		2
	50	50	21.41	21.25	21.10		2
	100	0	21.40	21.27	21.15		2
64QAM	1	0	21.43	21.53	21.60	0-2	2
	1	50	21.45	21.26	21.32		2
	1	99	21.39	21.20	21.24		2
	50	0	20.51	20.46	20.39	0-3	3
	50	25	20.51	20.40	20.31		3
	50	50	20.51	20.27	20.22		3
	100	0	20.54	20.38	20.38		3

Table 8-38
LTE Band 7 (2535.0MHz) Conducted Powers – 15MHz Bandwidth

Modulation	RB Size	RB Offset	Low Channel 20825 (2507.5 MHz)	Mid Channel 21100 (2535.0 MHz)	High Channel 21375 (2562.5 MHz)	MPR Allowed per 3GPP [dB]	MPR [dB]
			Conducted Power [dBm]				
QPSK	1	0	23.61	23.47	23.50	0	0
	1	36	23.66	23.54	23.46		0
	1	74	23.70	23.47	23.37		0
	36	0	22.59	22.63	22.59	0-1	1
	36	18	22.67	22.64	22.62		1
	36	37	22.68	22.59	22.55		1
	75	0	22.64	22.63	22.56		1
16QAM	1	0	22.29	22.28	22.13	0-1	1
	1	36	22.35	22.38	22.20		1
	1	74	22.33	22.35	22.15		1
	36	0	21.53	21.51	21.53	0-2	2
	36	18	21.62	21.54	21.58		2
	36	37	21.62	21.48	21.48		2
	75	0	21.56	21.50	21.47		2
64QAM	1	0	21.47	21.54	21.45	0-2	2
	1	36	21.38	21.40	21.44		2
	1	74	21.42	21.52	21.34		2
	36	0	20.66	20.66	20.46	0-3	3
	36	18	20.59	20.68	20.43		3
	36	37	20.55	20.62	20.65		3
	75	0	20.69	20.64	20.62		3

© 2019 PCTEST Engineering Laboratory, Inc. All rights reserved. Unless otherwise specified, no part of this report may be reproduced or utilized in any part, form or by any means, electronic or mechanical, including photocopying and microfilm, without permission in writing from PCTEST Engineering Laboratory, Inc. If you have any questions about this international copyright or have an enquiry about obtaining additional rights to this report or assembly of contents thereof, please contact INFO@PCTEST.COM.

Table 8-39
LTE Band 7 (2535.0MHz) Conducted Powers – 10MHz Bandwidth

Modulation	RB Size	RB Offset	Low Channel 20800 (2505.0 MHz)	Mid Channel 21100 (2535.0 MHz)	High Channel 21400 (2565.0 MHz)	MPR Allowed per 3GPP [dB]	MPR [dB]
			Conducted Power [dBm]				
QPSK	1	0	23.40	23.40	23.27	0	0
	1	25	23.39	23.25	23.17		0
	1	49	23.50	23.33	23.22		0
	25	0	22.50	22.48	22.45	0-1	1
	25	12	22.48	22.50	22.43		1
	25	25	22.47	22.47	22.44		1
	50	0	22.42	22.48	22.39		1
16QAM	1	0	22.26	22.51	22.28	0-1	1
	1	25	22.26	22.35	22.13		1
	1	49	22.41	22.55	22.17		1
	25	0	21.61	21.66	21.53	0-2	2
	25	12	21.63	21.67	21.55		2
	25	25	21.62	21.62	21.49		2
	50	0	21.61	21.61	21.49		2
64QAM	1	0	21.46	21.46	21.17	0-2	2
	1	25	21.42	21.49	21.10		2
	1	49	21.61	21.52	21.20		2
	25	0	20.46	20.45	20.46	0-3	3
	25	12	20.46	20.48	20.49		3
	25	25	20.44	20.46	20.46		3
	50	0	20.46	20.49	20.43		3

Table 8-40
LTE Band 7 (2535.0MHz) Conducted Powers – 5MHz Bandwidth

Modulation	RB Size	RB Offset	Low Channel 20775 (2502.5 MHz)	Mid Channel 21100 (2535.0 MHz)	High Channel 21425 (2567.5 MHz)	MPR Allowed per 3GPP [dB]	MPR [dB]
			Conducted Power [dBm]				
QPSK	1	0	23.32	23.36	23.48	0	0
	1	12	23.47	23.49	23.54		0
	1	24	23.46	23.52	23.56		0
	12	0	22.48	22.45	22.46	0-1	1
	12	6	22.58	22.56	22.55		1
	12	13	22.55	22.58	22.52		1
	25	0	22.49	22.48	22.46		1
16QAM	1	0	22.24	22.23	22.39	0-1	1
	1	12	22.40	22.35	22.56		1
	1	24	22.40	22.22	22.51		1
	12	0	21.51	21.49	21.48	0-2	2
	12	6	21.60	21.61	21.54		2
	12	13	21.64	21.56	21.53		2
	25	0	21.51	21.59	21.50		2
64QAM	1	0	21.22	21.29	21.32	0-2	2
	1	12	21.34	21.44	21.54		2
	1	24	21.39	21.45	21.52		2
	12	0	20.59	20.48	20.55	0-3	3
	12	6	20.68	20.61	20.61		3
	12	13	20.69	20.59	20.56		3
	25	0	20.48	20.45	20.60		3

© 2019 PCTEST Engineering Laboratory, Inc. All rights reserved. Unless otherwise specified, no part of this report may be reproduced or utilized in any part, form or by any means, electronic or mechanical, including photocopying and microfilm, without permission in writing from PCTEST Engineering Laboratory, Inc. If you have any questions about this international copyright or have an enquiry about obtaining additional rights to this report or assembly of contents thereof, please contact INFO@PCTEST.COM.

k. LTE Band 41 – Power Class 3

Table 8-41
LTE Band 41 (2593.0MHz) Conducted Powers – 20MHz Bandwidth

Modulation	RB Size	RB Offset	Low Channel 39750 (2506.0 MHz)	Low-Mid Channel 40185 (2549.5 MHz)	Mid Channel 40620 (2593.0 MHz)	Mid-High Channel 41055 (2636.5 MHz)	High Channel 41490 (2680.0 MHz)	MPR Allowed per 3GPP [dB]	MPR [dB]
			Conducted Power [dBm]						
QPSK	1	0	24.96	24.96	25.08	24.87	24.67	0	0
	1	50	24.94	24.94	24.92	24.85	24.73		0
	1	99	24.97	24.91	24.88	24.61	24.93		0
	50	0	23.84	23.93	23.99	23.79	23.74	0-1	1
	50	25	23.91	23.95	23.98	23.77	23.79		1
	50	50	23.92	23.89	23.92	23.68	23.87		1
	100	0	23.88	23.91	23.94	23.73	23.79		1
16QAM	1	0	23.71	23.75	23.75	23.64	23.49	0-1	1
	1	50	23.69	23.72	23.74	23.50	23.58		1
	1	99	23.70	23.70	23.69	23.40	23.71		1
	50	0	22.82	22.89	22.90	22.80	22.71	0-2	2
	50	25	22.84	22.92	22.93	22.75	22.77		2
	50	50	22.87	22.85	22.89	22.66	22.85		2
	100	0	22.93	22.93	22.94	22.75	22.80		2
64QAM	1	0	22.69	22.75	22.71	22.63	22.59	0-2	2
	1	50	22.64	22.69	22.73	22.51	22.61		2
	1	99	22.66	22.68	22.62	22.41	22.75		2
	50	0	21.88	21.88	21.82	21.75	21.79	0-3	3
	50	25	21.89	21.86	21.85	21.74	21.87		3
	50	50	21.87	21.77	21.77	21.63	21.92		3
	100	0	21.85	21.80	21.74	21.51	21.79		3

Table 8-42
LTE Band 41 (2593.0MHz) Conducted Powers – 15MHz Bandwidth

Modulation	RB Size	RB Offset	Low Channel 39750 (2506.0 MHz)	Low-Mid Channel 40185 (2549.5 MHz)	Mid Channel 40620 (2593.0 MHz)	Mid-High Channel 41055 (2636.5 MHz)	High Channel 41490 (2680.0 MHz)	MPR Allowed per 3GPP [dB]	MPR [dB]
			Conducted Power [dBm]						
QPSK	1	0	24.96	25.04	24.99	25.05	25.05	0	0
	1	36	25.00	25.11	25.07	25.01	25.16		0
	1	74	25.02	24.96	25.00	24.88	25.01		0
	36	0	23.90	23.91	23.92	23.94	24.01	0-1	1
	36	18	23.93	23.96	23.97	23.94	24.09		1
	36	37	23.93	23.86	23.96	23.86	24.08		1
	75	0	23.88	23.86	23.88	23.87	23.99		1
16QAM	1	0	23.51	23.75	23.53	23.77	23.55	0-1	1
	1	36	23.54	23.87	23.61	23.74	23.70		1
	1	74	23.52	23.73	23.56	23.62	23.76		1
	36	0	22.85	22.80	22.88	22.81	22.96	0-2	2
	36	18	22.90	22.83	22.94	22.80	23.04		2
	36	37	22.89	22.81	22.96	22.73	23.08		2
	75	0	22.81	22.79	22.87	22.81	22.97		2
64QAM	1	0	22.59	22.73	22.64	23.02	22.66	0-2	2
	1	36	22.62	22.66	22.75	23.01	22.79		2
	1	74	22.60	22.50	22.75	22.85	22.86		2
	36	0	21.95	21.86	22.00	21.89	22.03	0-3	3
	36	18	21.99	21.96	22.03	21.87	22.13		3
	36	37	21.98	21.89	22.01	21.80	22.16		3
	75	0	21.93	21.89	21.96	21.93	22.07		3

© 2019 PCTEST Engineering Laboratory, Inc. All rights reserved. Unless otherwise specified, no part of this report may be reproduced or utilized in any part, form or by any means, electronic or mechanical, including photocopying and microfilm, without permission in writing from PCTEST Engineering Laboratory, Inc. If you have any questions about this international copyright or have an enquiry about obtaining additional rights to this report or assembly of contents thereof, please contact INFO@PCTEST.COM.

Table 8-43
LTE Band 41 (2593.0MHz) Conducted Powers – 10MHz Bandwidth

Modulation	RB Size	RB Offset	Low Channel 39750 (2506.0 MHz)	Low-Mid Channel 40185 (2549.5 MHz)	Mid Channel 40620 (2593.0 MHz)	Mid-High Channel 41055 (2636.5 MHz)	High Channel 41490 (2680.0 MHz)	MPR Allowed per 3GPP [dB]	MPR [dB]
			Conducted Power [dBm]						
QPSK	1	0	24.70	24.63	24.81	24.68	24.85	0	0
	1	25	24.73	24.70	24.78	24.59	24.94		0
	1	49	24.77	24.65	24.76	24.58	24.90		0
	25	0	23.69	23.72	23.79	23.66	23.79	0-1	1
	25	12	23.71	23.75	23.82	23.61	23.84		1
	25	25	23.66	23.67	23.73	23.57	23.83		1
	50	0	23.74	23.72	23.82	23.58	23.86		1
16QAM	1	0	23.52	23.59	23.68	23.41	23.63	0-1	1
	1	25	23.57	23.52	23.62	23.33	23.71		1
	1	49	23.49	23.50	23.51	23.29	23.59		1
	25	0	22.63	22.60	22.74	22.37	22.78	0-2	2
	25	12	22.58	22.61	22.73	22.36	22.76		2
	25	25	22.62	22.52	22.71	22.31	22.74		2
	50	0	22.65	22.62	22.70	22.42	22.78		2
64QAM	1	0	22.21	22.35	22.30	22.22	22.31	0-2	2
	1	25	22.20	22.26	22.10	22.16	22.38		2
	1	49	22.19	22.27	22.27	22.06	22.32		2
	25	0	21.75	21.79	21.69	21.61	21.87	0-3	3
	25	12	21.76	21.79	21.69	21.59	21.85		3
	25	25	21.70	21.73	21.61	21.55	21.85		3
	50	0	21.47	21.78	21.73	21.54	21.86		3

Table 8-44
LTE Band 41 (2593.0MHz) Conducted Powers – 5MHz Bandwidth

Modulation	RB Size	RB Offset	Low Channel 39750 (2506.0 MHz)	Low-Mid Channel 40185 (2549.5 MHz)	Mid Channel 40620 (2593.0 MHz)	Mid-High Channel 41055 (2636.5 MHz)	High Channel 41490 (2680.0 MHz)	MPR Allowed per 3GPP [dB]	MPR [dB]
			Conducted Power [dBm]						
QPSK	1	0	24.82	24.79	24.85	24.67	24.83	0	0
	1	12	24.86	24.83	24.89	24.70	24.92		0
	1	24	24.87	24.79	24.88	24.67	24.95		0
	12	0	23.68	23.81	23.78	23.58	23.79	0-1	1
	12	6	23.76	23.75	23.82	23.59	23.81		1
	12	13	23.76	23.78	23.84	23.62	23.86		1
	25	0	23.74	23.79	23.86	23.71	23.88		1
16QAM	1	0	23.50	23.33	23.34	23.05	23.80	0-1	1
	1	12	23.54	23.34	23.36	23.04	23.39		1
	1	24	23.56	23.35	23.38	23.08	23.43		1
	12	0	22.42	22.42	22.41	22.17	22.48	0-2	2
	12	6	22.44	22.36	22.46	22.20	22.50		2
	12	13	22.44	22.38	22.47	22.23	22.51		2
	25	0	22.50	22.44	22.52	22.33	22.55		2
64QAM	1	0	21.95	21.85	21.92	22.17	22.57	0-2	2
	1	12	21.95	21.91	21.94	22.17	22.43		2
	1	24	22.01	21.93	22.02	22.23	22.52		2
	12	0	21.65	21.82	21.75	21.51	21.57	0-3	3
	12	6	21.71	21.84	21.79	21.53	21.80		3
	12	13	21.68	21.80	21.69	21.56	21.85		3
	25	0	21.79	21.82	21.85	21.65	21.85		3

© 2019 PCTEST Engineering Laboratory, Inc. All rights reserved. Unless otherwise specified, no part of this report may be reproduced or utilized in any part, form or by any means, electronic or mechanical, including photocopying and microfilm, without permission in writing from PCTEST Engineering Laboratory, Inc. If you have any questions about this international copyright or have an enquiry about obtaining additional rights to this report or assembly of contents thereof, please contact INFO@PCTEST.COM.

I. LTE Band 41 – Power Class 2

Table 8-45
LTE Band 41 (2593.0MHz) Conducted Powers – 20MHz Bandwidth

Modulation	RB Size	RB Offset	Low Channel 39750 (2506.0 MHz)	Low-Mid Channel 40185 (2549.5 MHz)	Mid Channel 40620 (2593.0 MHz)	Mid-High Channel 41055 (2636.5 MHz)	High Channel 41490 (2680.0 MHz)	MPR Allowed per 3GPP [dB]	MPR [dB]
			Conducted Power [dBm]						
QPSK	1	0	27.54	27.66	27.40	27.62	27.67	0	0
	1	50	27.57	27.51	27.51	27.55	27.69		0
	1	99	27.62	27.43	27.54	27.44	27.70		0
	50	0	26.42	26.42	26.51	26.64	26.57	0-1	1
	50	25	26.45	26.47	26.49	26.58	26.61		1
	50	50	26.47	26.49	26.41	26.43	26.67		1
	100	0	26.41	26.40	26.35	26.51	26.60		1
16QAM	1	0	26.25	26.38	26.33	26.63	26.31	0-1	1
	1	50	26.31	26.13	26.34	26.48	26.46		1
	1	99	26.39	26.11	26.36	26.29	26.53		1
	50	0	25.38	25.47	25.42	25.53	25.48	0-2	2
	50	25	25.42	25.40	25.44	25.56	25.61		2
	50	50	25.53	25.34	25.36	25.41	25.67		2
	100	0	25.38	25.39	25.37	25.50	25.59		2
64QAM	1	0	25.04	25.09	25.02	25.21	25.02	0-2	2
	1	50	25.00	24.93	25.04	25.12	25.11		2
	1	99	25.15	24.91	24.97	25.05	25.39		2
	50	0	24.40	24.46	24.38	24.53	24.42	0-3	3
	50	25	24.47	24.45	24.40	24.47	24.56		3
	50	50	24.50	24.31	24.39	24.41	24.63		3
	100	0	24.32	24.36	24.32	24.47	24.46		3

Table 8-46
LTE Band 41 (2593.0MHz) Conducted Powers – 15MHz Bandwidth

Modulation	RB Size	RB Offset	Low Channel 39750 (2506.0 MHz)	Low-Mid Channel 40185 (2549.5 MHz)	Mid Channel 40620 (2593.0 MHz)	Mid-High Channel 41055 (2636.5 MHz)	High Channel 41490 (2680.0 MHz)	MPR Allowed per 3GPP [dB]	MPR [dB]
			Conducted Power [dBm]						
QPSK	1	0	27.51	27.43	27.59	27.12	27.55	0	0
	1	36	27.52	27.46	27.64	27.05	27.65		0
	1	74	27.42	27.33	27.44	26.95	27.60		0
	36	0	26.43	26.39	26.44	26.28	26.37	0-1	1
	36	18	26.48	26.40	26.54	26.29	26.41		1
	36	37	26.47	26.27	26.48	26.30	26.39		1
	75	0	26.40	26.26	26.42	26.36	26.34		1
16QAM	1	0	26.42	26.48	26.69	26.31	26.31	0-1	1
	1	36	26.42	26.48	26.54	26.25	26.38		1
	1	74	26.37	26.37	26.47	26.34	26.38		1
	36	0	25.42	25.22	25.38	25.26	25.35	0-2	2
	36	18	25.45	25.23	25.44	25.27	25.41		2
	36	37	25.43	25.13	25.42	25.30	25.37		2
	75	0	25.36	25.20	25.34	25.14	25.27		2
64QAM	1	0	25.49	25.32	25.21	25.19	25.05	0-2	2
	1	36	25.35	24.78	25.27	25.09	25.21		2
	1	74	25.17	25.16	25.20	25.01	25.36		2
	36	0	24.28	24.29	24.68	24.12	24.63	0-3	3
	36	18	24.35	24.28	24.62	24.29	24.70		3
	36	37	24.26	24.22	24.43	24.33	24.57		3
	75	0	24.23	24.36	24.51	24.37	24.54		3

© 2019 PCTEST Engineering Laboratory, Inc. All rights reserved. Unless otherwise specified, no part of this report may be reproduced or utilized in any part, form or by any means, electronic or mechanical, including photocopying and microfilm, without permission in writing from PCTEST Engineering Laboratory, Inc. If you have any questions about this international copyright or have an enquiry about obtaining additional rights to this report or assembly of contents thereof, please contact INFO@PCTEST.COM.

Table 8-47
LTE Band 41 (2593.0MHz) Conducted Powers – 10MHz Bandwidth

Modulation	RB Size	RB Offset	Low Channel 39750 (2506.0 MHz)	Low-Mid Channel 40185 (2549.5 MHz)	Mid Channel 40620 (2593.0 MHz)	Mid-High Channel 41055 (2636.5 MHz)	High Channel 41490 (2680.0 MHz)	MPR Allowed per 3GPP [dB]	MPR [dB]
			Conducted Power [dBm]						
QPSK	1	0	27.56	27.39	27.61	27.07	27.38	0	0
	1	25	27.40	27.31	27.56	26.97	27.31		0
	1	49	27.44	27.32	27.59	27.10	27.32		0
	25	0	26.36	26.32	26.46	26.12	26.29	0-1	1
	25	12	26.37	26.31	26.49	26.12	26.29		1
	25	25	26.31	26.24	26.42	26.07	26.23		1
	50	0	26.33	26.26	26.45	26.07	26.25		1
16QAM	1	0	26.51	26.67	26.64	26.35	26.70	0-1	1
	1	25	26.42	26.59	26.61	26.27	26.53		1
	1	49	26.44	26.62	26.58	26.26	26.57		1
	25	0	25.30	25.19	25.35	25.24	25.17	0-2	2
	25	12	25.32	25.22	25.36	25.25	25.18		2
	25	25	25.26	25.16	25.28	25.20	25.12		2
	50	0	25.28	25.18	25.33	25.19	25.16		2
64QAM	1	0	25.69	25.24	25.68	25.14	25.07	0-2	2
	1	25	25.59	25.18	25.52	25.07	25.09		2
	1	49	25.55	25.14	25.33	25.05	24.96		2
	25	0	24.33	24.35	24.23	24.46	24.40	0-3	3
	25	12	24.41	24.38	24.20	24.45	24.23		3
	25	25	24.36	24.28	24.17	24.43	24.44		3
	50	0	24.30	24.31	24.19	24.40	24.33		3

Table 8-48
LTE Band 41 (2593.0MHz) Conducted Powers – 5MHz Bandwidth

Modulation	RB Size	RB Offset	Low Channel 39750 (2506.0 MHz)	Low-Mid Channel 40185 (2549.5 MHz)	Mid Channel 40620 (2593.0 MHz)	Mid-High Channel 41055 (2636.5 MHz)	High Channel 41490 (2680.0 MHz)	MPR Allowed per 3GPP [dB]	MPR [dB]
			Conducted Power [dBm]						
QPSK	1	0	27.12	27.25	27.17	27.29	27.09	0	0
	1	12	27.27	27.29	27.19	27.20	27.20		0
	1	24	27.18	27.26	27.16	27.31	27.12		0
	12	0	26.22	26.36	26.31	26.39	26.24	0-1	1
	12	6	26.25	26.37	26.35	26.44	26.32		1
	12	13	26.27	26.34	26.32	26.42	26.25		1
	25	0	26.21	26.32	26.27	26.39	26.22		1
16QAM	1	0	26.25	26.25	26.42	26.42	26.31	0-1	1
	1	12	26.21	26.36	26.43	26.42	26.33		1
	1	24	26.19	26.45	26.44	26.42	26.48		1
	12	0	25.18	25.40	25.32	25.46	25.39	0-2	2
	12	6	25.22	25.37	25.36	25.51	25.40		2
	12	13	25.33	25.36	25.33	25.49	25.36		2
	25	0	25.18	25.28	25.37	25.41	25.35		2
64QAM	1	0	24.84	25.34	25.31	25.22	25.33	0-2	2
	1	12	24.80	25.22	25.38	25.03	25.37		2
	1	24	24.95	25.33	25.40	25.06	24.81		2
	12	0	24.20	24.19	24.32	24.31	24.42	0-3	3
	12	6	24.27	24.26	24.31	24.36	24.44		3
	12	13	24.30	24.20	24.39	24.34	24.39		3
	25	0	24.12	24.24	24.23	24.25	24.35		3

© 2019 PCTEST Engineering Laboratory, Inc. All rights reserved. Unless otherwise specified, no part of this report may be reproduced or utilized in any part, form or by any means, electronic or mechanical, including photocopying and microfilm, without permission in writing from PCTEST Engineering Laboratory, Inc. If you have any questions about this international copyright or have an enquiry about obtaining additional rights to this report or assembly of contents thereof, please contact INFO@PCTEST.COM.

m. LTE Band 48

Table 8-49
LTE Band 48 (3625.0MHz) Conducted Powers – 20MHz Bandwidth

Modulation	RB Size	RB Offset	Low Channel 55340 (3560.0 MHz)	Low-Mid Channel 55773 (3603.3 MHz)	Mid-High Channel 56207 (3646.7 MHz)	High Channel 56640 (3690.0 MHz)	MPR Allowed per 3GPP [dB]	MPR [dB]
			Conducted Power [dBm]					
QPSK	1	0	24.19	24.05	24.17	24.18	0	0
	1	50	24.15	24.08	24.18	24.14		0
	1	99	24.18	24.18	24.20	24.10		0
	50	0	22.68	22.77	22.78	22.69	0-1	1
	50	25	22.71	22.78	23.15	22.71		1
	50	50	22.68	22.74	22.80	22.63		1
	100	0	22.72	22.74	22.80	22.66		1
16QAM	1	0	23.17	23.16	23.20	22.96	0-1	1
	1	50	23.12	23.15	23.19	22.94		1
	1	99	23.11	23.20	23.15	22.90		1
	50	0	21.86	21.98	21.96	22.03	0-2	2
	50	25	21.88	21.98	22.01	21.99		2
	50	50	21.87	21.94	21.98	21.94		2
	100	0	21.89	21.93	21.98	22.02		2
64QAM	1	0	22.18	22.19	22.08	22.19	0-2	2
	1	50	22.18	22.18	22.11	22.18		2
	1	99	22.17	22.20	22.10	22.19		2
	50	0	20.70	20.76	20.89	20.70	0-3	3
	50	25	20.74	20.78	20.88	20.89		3
	50	50	20.73	20.77	20.92	20.81		3
	100	0	20.73	20.76	20.86	20.71		3

Table 8-50
LTE Band 48 (3625.0MHz) Conducted Powers – 15MHz Bandwidth

Modulation	RB Size	RB Offset	Low Channel 55315 (3557.5 MHz)	Low-Mid Channel 55765 (3602.5 MHz)	Mid-High Channel 56215 (3647.5 MHz)	High Channel 56665 (3692.5 MHz)	MPR Allowed per 3GPP [dB]	MPR [dB]
			Conducted Power [dBm]					
QPSK	1	0	24.12	24.00	24.09	24.08	0	0
	1	36	24.16	24.01	24.13	24.08		0
	1	74	24.05	24.08	24.10	24.02		0
	36	0	23.05	23.08	23.09	23.04	0-1	1
	36	18	22.81	22.81	22.86	22.78		1
	36	37	22.77	22.77	22.83	22.72		1
	75	0	22.73	22.73	22.79	22.73		1
16QAM	1	0	22.85	22.72	22.54	22.85	0-1	1
	1	36	22.89	22.78	22.60	22.87		1
	1	74	22.83	22.81	22.58	22.82		1
	36	0	21.67	21.66	21.76	21.70	0-2	2
	36	18	21.76	21.70	21.86	21.72		2
	36	37	21.69	21.65	21.81	21.66		2
	75	0	21.67	21.69	21.74	21.65		2
64QAM	1	0	21.90	21.80	21.75	21.79	0-2	2
	1	36	21.88	21.87	21.74	21.87		2
	1	74	21.82	21.88	21.74	21.75		2
	36	0	20.82	20.75	20.65	20.83	0-3	3
	36	18	20.89	20.75	20.71	20.84		3
	36	37	20.69	20.68	20.67	20.76		3
	75	0	20.70	20.59	20.75	20.77		3

© 2019 PCTEST Engineering Laboratory, Inc. All rights reserved. Unless otherwise specified, no part of this report may be reproduced or utilized in any part, form or by any means, electronic or mechanical, including photocopying and microfilm, without permission in writing from PCTEST Engineering Laboratory, Inc. If you have any questions about this international copyright or have an enquiry about obtaining additional rights to this report or assembly of contents thereof, please contact INFO@PCTEST.COM.

Table 8-51
LTE Band 48 (3625.0MHz) Conducted Powers – 10MHz Bandwidth

Modulation	RB Size	RB Offset	Low Channel 55290 (3555.0 MHz)	Low-Mid Channel 55757 (3601.7 MHz)	Mid-High Channel 56223 (3648.3 MHz)	High Channel 56690 (3695.0 MHz)	MPR Allowed per 3GPP [dB]	MPR [dB]
			Conducted Power [dBm]					
QPSK	1	0	24.03	24.07	24.00	24.14	0	0
	1	25	24.05	24.08	23.93	24.17		0
	1	49	24.09	24.16	24.06	24.15		0
	25	0	22.70	22.68	22.65	22.67	0-1	1
	25	12	22.79	22.76	22.72	22.74		1
	25	25	22.79	22.76	22.75	22.74		1
	50	0	22.76	22.74	22.75	22.73		1
16QAM	1	0	22.80	22.88	22.69	22.59	0-1	1
	1	25	22.81	22.83	22.62	22.54		1
	1	49	22.63	22.84	22.76	22.54		1
	25	0	21.63	21.64	21.55	21.56	0-2	2
	25	12	21.76	21.79	21.59	21.66		2
	25	25	21.73	21.69	21.58	21.67		2
	50	0	21.72	21.66	21.59	21.69		2
64QAM	1	0	21.89	21.81	21.77	21.83	0-2	2
	1	25	21.88	21.77	21.67	21.82		2
	1	49	21.75	21.84	21.79	21.86		2
	25	0	20.77	20.77	20.74	20.69	0-3	3
	25	12	20.84	20.86	20.76	20.81		3
	25	25	20.75	20.83	20.69	20.68		3
	50	0	20.78	20.87	20.80	20.67		3

Table 8-52
LTE Band 48 (3625.0MHz) Conducted Powers – 5MHz Bandwidth

Modulation	RB Size	RB Offset	Low Channel 55265 (3552.5 MHz)	Low-Mid Channel 55748 (3600.8 MHz)	Mid-High Channel 56232 (3649.2 MHz)	High Channel 56715 (3697.5 MHz)	MPR Allowed per 3GPP [dB]	MPR [dB]
			Conducted Power [dBm]					
QPSK	1	0	24.09	24.06	24.04	24.09	0	0
	1	12	24.18	24.10	24.10	24.09		0
	1	24	24.07	24.02	24.06	24.10		0
	12	0	23.04	22.98	23.04	23.00	0-1	1
	12	6	23.08	23.05	23.10	23.06		1
	12	13	23.07	23.05	23.09	23.05		1
	25	0	23.04	23.03	23.08	23.01		1
16QAM	1	0	22.63	22.50	22.50	22.65	0-1	1
	1	12	22.65	22.63	22.39	22.72		1
	1	24	22.72	22.43	22.53	22.67		1
	12	0	21.77	21.74	21.83	21.66	0-2	2
	12	6	21.85	21.82	21.89	21.87		2
	12	13	21.83	21.81	21.89	21.81		2
	25	0	21.74	21.71	21.83	21.73		2
64QAM	1	0	21.60	21.57	21.59	21.49	0-2	2
	1	12	21.64	21.55	21.41	21.44		2
	1	24	21.54	21.55	21.46	21.38		2
	12	0	21.05	21.08	21.07	21.04	0-3	3
	12	6	21.12	21.16	21.13	21.08		3
	12	13	21.08	21.08	21.12	21.06		3
	25	0	21.02	21.02	21.06	20.90		3

© 2019 PCTEST Engineering Laboratory, Inc. All rights reserved. Unless otherwise specified, no part of this report may be reproduced or utilized in any part, form or by any means, electronic or mechanical, including photocopying and microfilm, without permission in writing from PCTEST Engineering Laboratory, Inc. If you have any questions about this international copyright or have an enquiry about obtaining additional rights to this report or assembly of contents thereof, please contact INFO@PCTEST.COM.

n. LTE Uplink Carrier Aggregation

Table 8-53
LTE FDD Uplink Two Component Carrier Aggregation Conducted Powers

Combination	PCC							SCC							LTE Tx.Power with UL CA Enabled (dBm)
	PCC Band	PCC Bandwidth [MHz]	PCC (UL/DL) Channel	PCC (UL/DL) Frequency [MHz]	Modulation	PCC UL# RB	PCC UL RB Offset	SCC Band	SCC Bandwidth [MHz]	SCC (UL/DL) Channel	SCC (UL/DL) Frequency [MHz]	Modulation	SCC UL# RB	SCC UL RB Offset	
CA_5B	LTE B5	10	20525	836.5	16QAM	1	0	LTE B5	5	20453	829.3	16QAM	1	24	25.25

Table 8-54
LTE TDD Uplink Two Component Carrier Aggregation Conducted Powers

Combination	PCC							SCC							LTE Tx.Power with UL CA Enabled (dBm)
	PCC Band	PCC Bandwidth [MHz]	PCC (UL/DL) Channel	PCC (UL/DL) Frequency [MHz]	Modulation	PCC UL# RB	PCC UL RB Offset	SCC Band	SCC Bandwidth [MHz]	SCC (UL/DL) Channel	SCC (UL/DL) Frequency [MHz]	Modulation	SCC UL# RB	SCC UL RB Offset	
CA_41C (PC3)	LTE B41	20	40620	2593.0	16QAM	1	0	LTE B41	20	40422	2573.2	16QAM	1	99	24.02
CA_41C (PC2)	LTE B41	20	40620	2593.0	16QAM	1	0	LTE B41	20	40422	2573.2	16QAM	1	99	25.50

© 2019 PCTEST Engineering Laboratory, Inc. All rights reserved. Unless otherwise specified, no part of this report may be reproduced or utilized in any part, form or by any means, electronic or mechanical, including photocopying and microfilm, without permission in writing from PCTEST Engineering Laboratory, Inc. If you have any questions about this international copyright or have an enquiry about obtaining additional rights to this report or assembly of contents thereof, please contact INFO@PCTEST.COM.

VIII.WIFI Conducted Powers (SISO/MIMO)

Table 8-55
IEEE 802.11b/g/n/ac (2.4GHz, SISO) Reduced Average RF Power[1]

2.4GHz Conducted Power [dBm]					
Freq [MHz]	Channel	IEEE Transmission Mode			
		802.11b	802.11g	802.11n	802.11ac
2412	1	17.05	16.80	15.58	15.54
2437	6	17.02	17.30	17.11	17.14
2462	11	16.75	16.48	15.32	15.30

Table 8-56
IEEE 802.11g/n/ac (2.4GHz, MIMO) Reduced Average RF Power[1]

2.4GHz Conducted Power [dBm]				
Freq [MHz]	Channel	IEEE Transmission Mode		
		802.11g	802.11n	802.11ac
2412	1	19.27	18.07	18.04
2437	6	19.83	19.63	19.67
2462	11	19.08	17.86	17.88

Table 8-57
IEEE 802.11a/n/ac (5GHz, 20MHz BW, SISO) Reduced Average RF Power[1]

5GHz (20MHz) Conducted Power [dBm]				
Freq [MHz]	Channel	IEEE Transmission Mode		
		802.11a	802.11n	802.11ac
5180	36	15.39	15.22	15.23
5200	40	15.42	15.34	15.29
5220	44	15.40	15.25	15.26
5240	48	15.28	15.13	15.14
5260	52	15.33	15.18	15.27
5280	56	15.47	15.32	15.35
5300	60	15.45	15.22	15.30
5320	64	15.32	15.07	15.15
5500	100	15.33	15.13	15.12
5600	120	15.46	15.25	15.23
5620	124	15.51	15.33	15.37
5720	144	15.56	15.47	15.52
5745	149	15.42	15.31	15.32
5785	157	15.72	15.69	15.58
5825	165	15.57	15.39	15.41

[1] Note: This device utilizes independent power reduction mechanisms for the WIFI transmitter in all WIFI modes for held-to-ear scenarios.

© 2019 PCTEST Engineering Laboratory, Inc. All rights reserved. Unless otherwise specified, no part of this report may be reproduced or utilized in any part, form or by any means, electronic or mechanical, including photocopying and microfilm, without permission in writing from PCTEST Engineering Laboratory, Inc. If you have any questions about this international copyright or have an enquiry about obtaining additional rights to this report or assembly of contents thereof, please contact INFO@PCTEST.COM.

Table 8-58
IEEE 802.11a/n/ac (5GHz, 20MHz BW, MIMO) Reduced Average RF Power[1]

5GHz (20MHz) Conducted Power [dBm]				
Freq [MHz]	Channel	IEEE Transmission Mode		
		802.11a	802.11n	802.11ac
5180	36	18.47	18.26	18.30
5200	40	18.53	18.36	18.39
5220	44	18.41	18.26	18.27
5240	48	18.46	18.24	18.24
5260	52	18.47	18.31	18.34
5280	56	18.56	18.35	18.40
5300	60	18.51	18.27	18.36
5320	64	18.49	18.16	18.27
5500	100	18.51	18.35	18.29
5600	120	18.45	18.23	18.27
5620	124	18.52	18.24	18.36
5720	144	18.49	18.41	18.38
5745	149	18.53	18.39	18.38
5785	157	18.65	18.55	18.46
5825	165	18.50	18.33	18.35

Table 8-59
IEEE 802.11n/ac (5GHz, 40MHz BW, SISO) Reduced Average RF Power[1]

5GHz (40MHz) Conducted Power [dBm]			
Freq [MHz]	Channel	IEEE Transmission Mode	
		802.11n	802.11ac
5190	38	15.41	15.38
5230	46	15.25	15.15
5270	54	15.15	15.09
5310	62	15.37	15.40
5510	102	15.23	15.24
5590	118	15.45	15.43
5630	126	15.27	15.29
5710	142	15.36	15.39
5755	151	15.38	15.43
5795	159	15.67	15.57

[1] Note: This device utilizes independent power reduction mechanisms for the WIFI transmitter in all WIFI modes for held-to-ear scenarios.

© 2019 PCTEST Engineering Laboratory, Inc. All rights reserved. Unless otherwise specified, no part of this report may be reproduced or utilized in any part, form or by any means, electronic or mechanical, including photocopying and microfilm, without permission in writing from PCTEST Engineering Laboratory, Inc. If you have any questions about this international copyright or have an enquiry about obtaining additional rights to this report or assembly of contents thereof, please contact INFO@PCTEST.COM.

Table 8-60
IEEE 802.11n/ac (5GHz, 40MHz BW, MIMO) Reduced Average RF Power[1]

5GHz (40MHz) Conducted Power [dBm]			
Freq [MHz]	Channel	IEEE Transmission Mode	
		802.11n	802.11ac
5190	38	18.35	18.39
5230	46	18.24	18.22
5270	54	18.31	18.28
5310	62	18.38	18.39
5510	102	18.35	18.34
5590	118	18.41	18.37
5630	126	18.31	18.28
5710	142	18.41	18.39
5755	151	18.42	18.44
5795	159	18.57	18.78

Table 8-61
IEEE 802.11ac (5GHz, 80MHz BW, SISO) Reduced Average RF Power[1]

5GHz (80MHz) Conducted Power [dBm]		
Freq [MHz]	Channel	IEEE Transmission Mode
		802.11ac
5210	42	13.22
5290	58	13.53
5530	106	13.46
5610	122	13.66
5775	155	13.79

Table 8-62
IEEE 802.11ac (5GHz, 80MHz BW, MIMO) Reduced Average RF Power[1]

5GHz (80MHz) Conducted Power [dBm]		
Freq [MHz]	Channel	IEEE Transmission Mode
		802.11ac
5210	42	16.33
5290	58	16.58
5530	106	16.51
5610	122	16.55
5775	155	16.68

[1] Note: This device utilizes independent power reduction mechanisms for the WIFI transmitter in all WIFI modes for held-to-ear scenarios.

© 2019 PCTEST Engineering Laboratory, Inc. All rights reserved. Unless otherwise specified, no part of this report may be reproduced or utilized in any part, form or by any means, electronic or mechanical, including photocopying and microfilm, without permission in writing from PCTEST Engineering Laboratory, Inc. If you have any questions about this international copyright or have an enquiry about obtaining additional rights to this report or assembly of contents thereof, please contact INFO@PCTEST.COM.

IX. WIFI Conducted Powers for Operations with Simultaneous 2.4GHz and 5GHz

Table 8-63
IEEE 802.11b/g/n/ac (2.4GHz, Ant2) Reduced Average RF Power[1]

2.4GHz Conducted Power [dBm]					
Freq [MHz]	Channel	IEEE Transmission Mode			
		802.11b	802.11g	802.11n	802.11ac
2412	1	17.05	16.80	15.58	15.54
2437	6	17.02	17.30	17.11	17.14
2462	11	16.75	16.48	15.32	15.30

Table 8-64
IEEE 802.11a/n/ac (5GHz, 20MHz BW, Ant1) Reduced Average RF Power[1]

5GHz (20MHz) Conducted Power [dBm]				
Freq [MHz]	Channel	IEEE Transmission Mode		
		802.11a	802.11n	802.11ac
5180	36	15.52	15.27	15.34
5200	40	15.62	15.35	15.46
5220	44	15.39	15.25	15.25
5240	48	15.61	15.32	15.31
5260	52	15.59	15.41	15.39
5280	56	15.62	15.35	15.43
5300	60	15.55	15.30	15.40
5320	64	15.63	15.23	15.37
5500	100	15.67	15.54	15.44
5600	120	15.42	15.19	15.28
5620	124	15.51	15.12	15.33
5720	144	15.40	15.33	15.21
5745	149	15.61	15.45	15.42
5785	157	15.55	15.38	15.32
5825	165	15.41	15.25	15.27

[1] Note: This device utilizes independent power reduction mechanisms for the WIFI transmitter in all WIFI modes for held-to-ear scenarios.

© 2019 PCTEST Engineering Laboratory, Inc. All rights reserved. Unless otherwise specified, no part of this report may be reproduced or utilized in any part, form or by any means, electronic or mechanical, including photocopying and microfilm, without permission in writing from PCTEST Engineering Laboratory, Inc. If you have any questions about this international copyright or have an enquiry about obtaining additional rights to this report or assembly of contents thereof, please contact INFO@PCTEST.COM.

Table 8-65
IEEE 802.11n/ac (5GHz, 40MHz BW, Ant1) Average RF Power

5GHz (40MHz) Conducted Power [dBm]			
Freq [MHz]	Channel	IEEE Transmission Mode	
		802.11n	802.11ac
5190	38	15.27	15.37
5230	46	15.21	15.27
5270	54	15.45	15.45
5310	62	15.36	15.35
5510	102	15.45	15.41
5590	118	15.35	15.28
5630	126	15.32	15.24
5710	142	15.43	15.37
5755	151	15.43	15.43
5795	159	15.45	15.97

Table 8-66
IEEE 802.11ac (5GHz, 80MHz BW, Ant1) Average RF Power

5GHz (80MHz) Conducted Power [dBm]		
Freq [MHz]	Channel	IEEE Transmission Mode
		802.11ac
5210	42	13.41
5290	58	13.60
5530	106	13.54
5610	122	13.42
5775	155	13.54

[1] Note: This device utilizes independent power reduction mechanisms for the WIFI transmitter in all WIFI modes for held-to-ear scenarios.

© 2019 PCTEST Engineering Laboratory, Inc. All rights reserved. Unless otherwise specified, no part of this report may be reproduced or utilized in any part, form or by any means, electronic or mechanical, including photocopying and microfilm, without permission in writing from PCTEST Engineering Laboratory, Inc. If you have any questions about this international copyright or have an enquiry about obtaining additional rights to this report or assembly of contents thereof, please contact INFO@PCTEST.COM.

9. JUSTIFICATION OF HELD TO EAR MODES TESTED

I. Analysis of RF Air Interface Technologies

An analysis was performed, following the guidance of §4.3 and §4.4 of the ANSI standard, of the RF air interface technologies being evaluated. The factors that will affect the RF interference potential were evaluated, and the worst-case operating modes were identified and used in the evaluation. A WD's interference potential is a function both of the WD's average near-field field strength and of the signal's audio-frequency amplitude modulation characteristics. Per §4.4, RF air interface technologies that have low power have been found to produce sufficiently low RF interference potential, so it is possible to exempt them from the product testing specified in Clause 5 of the ANSI standard. An RF air interface technology of a device is exempt from testing when its average antenna input power plus its MIF is ≤17dBm for all of its operating modes. RF air interface technologies exempted from testing in this manner are automatically assigned an M4 rating to be used in determining the overall rating for the WD.

The worst-case MIF plus the worst-case average antenna input power for all modes are investigated below to determine the testing requirements for this device.

II. Individual Mode Evaluations

Table 9-1

Max Power + MIF calculations for Low Power Exemptions

Air Interface	Maximum Average Power (dBm)	Worst Case MIF (dB)	Total (Power + MIF, dB)	C63.19 Testing Required
CDMA - Full Frame Rate	25.26	-19.13	6.13	No
CDMA - 1/8th Frame Rate	16.23[1]	3.00	19.23	Yes
CDMA - EvDO	25.28	-18.39	6.89	No
GSM850	24.21[1]	3.54	27.75	Yes
GSM1900	21.12[1]	3.50	24.62	Yes
GSM - EDGE850	17.67[1]	3.74	21.41	Yes[3]
GSM - EDGE1900	16.79[1]	3.74	20.53	Yes[3]
UMTS - RMC	25.26	-22.61	2.65	No
UMTS - AMR	25.27	-13.35	11.92	No
UMTS - HSPA	24.26	-22.41	1.85	No
LTE FDD	25.43	-9.51	15.92	No
LTE FDD - Uplink Carrier Aggregation	25.25	-11.72	13.53	No
LTE TDD - Band 41 (PC3)	18.47[1]	1.59	20.06	Yes
LTE TDD - Band 41 (PC2)	21.01[1]	1.61	22.62	Yes
LTE TDD - Band 48	17.51[1]	1.55	19.06	Yes
LTE TDD - Uplink Carrier Aggregation	18.81[1]	1.50	20.31	Yes[4]
WIFI - 2.4GHz	19.83	-8.93	10.90	No
WIFI - 5GHz	18.78	-8.29	10.49	No
Simultaneous 2.4GHz and 5GHz WIFI Operations	19.70	-9.62	10.08	No

[1] Note: ANSI C63.19-2011 Sec. 4.4 Footnote 20 indicates the use of a long averaging time for measuring the antenna input power when using this method of exclusion. Therefore, the frame averaged power was calculated for these modes in this investigation.

[2] Note: This value is calculated as the linear sum of the worst-case power for each band and antenna combination while in simultaneous 2.4GHz and 5GHz operation. This calculation is conservative and for use in this investigation only.

[3] Note: EDGE data modes were considered but not tested as GSM voice modes were found to be the worst-case modes for the GSM air interface.

[4] Note: LTE TDD Uplink Carrier Aggregation was considered but not tested as LTE TDD standalone data modes were found to be the worst-case modes for the LTE TDD air interface.

© 2019 PCTEST Engineering Laboratory, Inc. All rights reserved. Unless otherwise specified, no part of this report may be reproduced or utilized in any part, form or by any means, electronic or mechanical, including photocopying and microfilm, without permission in writing from PCTEST Engineering Laboratory, Inc. If you have any questions about this international copyright or have an enquiry about obtaining additional rights to this report or assembly of contents thereof, please contact INFO@PCTEST.COM.

III. Low-Power Exemption Conclusions

Per ANSI C63.19-2011, RF Emissions testing for this device is required only for GSM/CDMA 1/8th Frame Rate voice modes as well as LTE TDD (Power Class 3 and Power Class 2) data modes. All other air interfaces are exempt.

© 2019 PCTEST Engineering Laboratory, Inc. All rights reserved. Unless otherwise specified, no part of this report may be reproduced or utilized in any part, form or by any means, electronic or mechanical, including photocopying and microfilm, without permission in writing from PCTEST Engineering Laboratory, Inc. If you have any questions about this international copyright or have an enquiry about obtaining additional rights to this report or assembly of contents thereof, please contact INFO@PCTEST.COM.

10. LTE TDD UPLINK-DOWNLINK CONFIGURATION

I. Uplink-Downlink Configuration Additional Testing

Additional testing was performed on each supported power class for LTE TDD to determine the worst-case Uplink-Downlink configuration for RFE testing.

Per 3GPP TS 36.211, the total frame length for each TDD radio frame of length $T_f = 307200 \cdot T_s = 10$ ms, where T_s is a number of time units equal to 1/(15000 x 2048) seconds. Additionally, each radio frame consists of 10 subframes, each of length $30720 \cdot T_s = 1$ ms, and subframes can be designated as uplink (U), downlink (D), or special subframe (S), depending on the Uplink-Downlink configuration as indicated in Table 4.2-2 of 3GPP TS 36.211. In the transmission duty factor calculation, the special subframe configuration with the shortest UpPTS duration within the special subframe is used and will be applied for measurement. From 3GPP TS 36.211 Table 4.2-1, the shortest UpPTS is 2192 · Ts which occurs in the normal cyclic prefix and special subframe configuration 4.

See table below outlining the calculated transmission duty cycles for each Uplink-Downlink configuration:

Table 10-1
Uplink-Downlink Configurations for Type 2 Frame Structures

Uplink-downlink configuration	Downlink-to-Uplink Switch-point periodicity	Subframe number										Calculated Transmission Duty Cycle (%)
		0	1	2	3	4	5	6	7	8	9	
0	5 ms	D	S	U	U	U	D	S	U	U	U	61.4%
1	5 ms	D	S	U	U	D	D	S	U	U	D	41.4%
2	5 ms	D	S	U	D	D	D	S	U	D	D	21.4%
3	10 ms	D	S	U	U	U	D	D	D	D	D	30.7%
4	10 ms	D	S	U	U	D	D	D	D	D	D	20.7%
5	10 ms	D	S	U	D	D	D	D	D	D	D	10.7%
6	5 ms	D	S	U	U	U	D	S	U	U	D	51.4%

II. Power Class 3 Uplink-Downlink Configuration Additional Testing

LTE TDD was evaluated with the following radio configuration: channel 40620, 20MHz BW, 16QAM, 1RB, 0RB Offset. For Power Class 3, all configurations (0-6) are supported. The configuration which resulted in the worst-case emission was used for full testing. See Table 10-2 below for results. The configuration determined in the results below was used to measure the MIF values in Table 7-6 and 7-9.

Table 10-2
LTE TDD Power Class 3 UL-DL Configuration Results

Mode / Band	Bandwidth (MHz)	Channel	Accessory	UL-DL Config.	Mod.	RB Size	RB Offset	Scan Center	Time Avg. Field (V/m)	Time Avg. Field [dB(V/m)]	MIF (dB)	Audio Interference Level [dB(V/m)]	FCC Limit (dBV/m)	FCC Margin (dB)	Result	Excl Blocks per 5.5
E-Field Emissions																
LTE TDD / Band 41	20	40620	None	0	16QAM	1	0	Acoustic	21.32	26.58	-3.28	23.30	**35.00**	-11.70	**M4**	none
	20	40620	None	1	16QAM	1	0	Acoustic	19.15	25.64	-1.50	24.14	**35.00**	-10.86	**M4**	none
	20	40620	None	2	16QAM	1	0	Acoustic	13.57	22.65	1.53	24.18	**35.00**	-10.82	**M4**	none
	20	40620	None	3	16QAM	1	0	Acoustic	16.38	24.29	-1.18	23.11	**35.00**	-11.89	**M4**	none
	20	40620	None	4	16QAM	1	0	Acoustic	13.46	22.58	0.79	23.37	**35.00**	-11.63	**M4**	none
	20	40620	None	5	16QAM	1	0	Acoustic	10.26	20.22	3.71	23.93	**35.00**	-11.07	**M4**	none
	20	40620	None	6	16QAM	1	0	Acoustic	19.32	25.72	-2.36	23.36	**35.00**	-11.64	**M4**	none

© 2019 PCTEST Engineering Laboratory, Inc. All rights reserved. Unless otherwise specified, no part of this report may be reproduced or utilized in any part, form or by any means, electronic or mechanical, including photocopying and microfilm, without permission in writing from PCTEST Engineering Laboratory, Inc. If you have any questions about this international copyright or have an enquiry about obtaining additional rights to this report or assembly of contents thereof, please contact INFO@PCTEST.COM.

III. Power Class 2 Uplink-Downlink Configuration Additional Testing

LTE TDD was evaluated with the following radio configuration: channel 40620, 20MHz BW, 16QAM, 1RB, 0RB Offset. For Power Class 2, only configurations 1-5 are supported. The configuration which resulted in the worst-case emission was used for full testing. See Table 10-3 below for results. The configuration determined in the results below was used to measure the MIF values in Table 7-7.

Table 10-3
LTE TDD Power Class 2 UL-DL Configuration Results

Mode / Band	Bandwidth (MHz)	Channel	Accessory	UL-DL Config.	Mod.	RB Size	RB Offset	Scan Center	Time Avg. Field (V/m)	Time Avg. Field [dB(V/m)]	MIF (dB)	Audio Interference Level [dB(V/m)]	FCC Limit (dBV/m)	FCC Margin (dB)	Result	Excl Blocks per 5.5
E-Field Emissions																
LTE TDD / Band 41	20	40620	None	1	16QAM	1	0	Acoustic	18.90	25.53	-1.53	24.00	**35.00**	-11.00	**M4**	none
	20	40620	None	2	16QAM	1	0	Acoustic	13.70	22.73	1.58	24.31	**35.00**	-10.69	**M4**	none
	20	40620	None	3	16QAM	1	0	Acoustic	16.52	24.36	-1.18	23.18	**35.00**	-11.82	**M4**	none
	20	40620	None	4	16QAM	1	0	Acoustic	13.84	22.82	0.80	23.62	**35.00**	-11.38	**M4**	none
	20	40620	None	5	16QAM	1	0	Acoustic	10.63	20.53	3.77	24.30	**35.00**	-10.70	**M4**	none

IV. Conclusion

Per the results above, UL-DL Configuration 2 was used for both LTE TDD Power Class 3 and LTE TDD Power Class 2 testing.

© 2019 PCTEST Engineering Laboratory, Inc. All rights reserved. Unless otherwise specified, no part of this report may be reproduced or utilized in any part, form or by any means, electronic or mechanical, including photocopying and microfilm, without permission in writing from PCTEST Engineering Laboratory, Inc. If you have any questions about this international copyright or have an enquiry about obtaining additional rights to this report or assembly of contents thereof, please contact INFO@PCTEST.COM.

11. OVERALL MEASUREMENT SUMMARY

FCC ID:	ZNFG850UM
S/N:	03364

I. E-FIELD EMISSIONS:

Table 11-1
HAC Data Summary for CDMA E-field

Mode	Channel	RC/SO	Accessory	Scan Center	Conducted Power at BS (dBm)	Time Avg. Field (V/m)	Time Avg. Field [dB(V/m)]	MIF (dB)	Audio Interference Level [dB(V/m)]	FCC Limit (dBV/m)	FCC Margin (dB)	Result	Excl Blocks per 5.5
E-Field Emissions													
Cellular CDMA	564*	RC1/SO3	None	Acoustic	25.23	9.65	19.69	3.00	22.69	45.00	-22.31	M4	none
	1013	RC1/SO3	None	Acoustic	25.19	11.44	21.17	2.94	24.11	45.00	-20.89	M4	none
	384	RC1/SO3	None	Acoustic	25.19	9.65	19.69	2.98	22.67	45.00	-22.33	M4	none
	777	RC1/SO3	None	Acoustic	25.26	10.43	20.37	2.93	23.30	45.00	-21.70	M4	none
PCS CDMA	25	RC1/SO3	None	Acoustic	24.13	12.16	21.70	2.94	24.64	35.00	-10.36	M4	none
	600	RC1/SO3	None	Acoustic	24.05	11.44	21.17	2.92	24.09	35.00	-10.91	M4	none
	1175	RC1/SO3	None	Acoustic	23.99	10.13	20.11	2.93	23.04	35.00	-11.96	M4	none

*Note: Cell. CDMA Ch. 564 is the Part 90S test channel.

Table 11-2
HAC Data Summary for GSM E-field

Mode	Channel	Accessory	Scan Center	Conducted Power at BS (dBm)	Time Avg. Field (V/m)	Time Avg. Field [dB(V/m)]	MIF (dB)	Audio Interference Level [dB(V/m)]	FCC Limit (dBV/m)	FCC Margin (dB)	Result	Excl Blocks per 5.5
E-Field Emissions												
GSM850	128	None	Acoustic	33.24	31.10	29.86	3.54	33.39	45.00	-11.61	M4	none
	190	None	Acoustic	33.23	25.76	28.22	3.54	31.76	45.00	-13.24	M4	none
	251	None	Acoustic	33.17	25.12	28.00	3.54	31.54	45.00	-13.46	M4	none
GSM1900	512	None	Acoustic	29.99	15.36	23.73	3.50	27.23	35.00	-7.77	M4	7,8,9
	661	None	Acoustic	30.03	15.50	23.81	3.50	27.31	35.00	-7.69	M4	7,8,9
	810	None	Acoustic	30.15	12.68	22.06	3.50	25.56	35.00	-9.44	M4	7,8,9
	661	None	T-Coil	30.03	15.44	23.77	3.50	27.27	35.00	-7.73	M4	6,8,9
	661	Dual Display - Open*	Acoustic	30.03	15.94	24.05	3.50	27.55	35.00	-7.45	M4	7,8,9
	661	Dual Display - Closed*	Acoustic	30.03	14.67	23.33	3.50	26.83	35.00	-8.17	M4	7,8,9

*Note: The overall worst-case test configuration was additionally evaluated using the dual display accessory cover, in its open and closed position.

Table 11-3
HAC Data Summary for LTE TDD Band 41 Power Class 3 E-field

Mode / Band	Bandwidth (MHz)	Channel	Accessory	UL-DL Config.	Mod.	RB Size	RB Offset	Scan Center	Conducted Power at BS (dBm)	Time Avg. Field (V/m)	Time Avg. Field [dB(V/m)]	MIF (dB)	Audio Interference Level [dB(V/m)]	FCC Limit (dBV/m)	FCC Margin (dB)	Result	Excl Blocks per 5.5
E-Field Emissions																	
LTE TDD / Band 41 PC3	15	39750	None	2	16QAM	1	0	Acoustic	23.51	12.83	22.16	1.50	23.66	35.00	-11.34	M4	none
	15	40185	None	2	16QAM	1	0	Acoustic	23.75	11.37	21.12	1.46	22.58	35.00	-12.42	M4	none
	15	40620	None	2	16QAM	1	0	Acoustic	23.53	13.11	22.35	1.59	23.94	35.00	-11.06	M4	none
	15	41055	None	2	16QAM	1	0	Acoustic	23.77	11.99	21.58	1.51	23.09	35.00	-11.91	M4	none
	15	41490	None	2	16QAM	1	0	Acoustic	23.55	11.50	21.21	1.47	22.68	35.00	-12.32	M4	none

© 2019 PCTEST Engineering Laboratory, Inc. All rights reserved. Unless otherwise specified, no part of this report may be reproduced or utilized in any part, form or by any means, electronic or mechanical, including photocopying and microfilm, without permission in writing from PCTEST Engineering Laboratory, Inc. If you have any questions about this international copyright or have an enquiry about obtaining additional rights to this report or assembly of contents thereof, please contact INFO@PCTEST.COM.

Table 11-4
HAC Data Summary for LTE TDD Band 41 Power Class 2 E-field

Mode / Band	Bandwidth (MHz)	Channel	Accessory	UL-DL Config.	Mod.	RB Size	RB Offset	Scan Center	Conducted Power at BS (dBm)	Time Avg. Field (V/m)	Time Avg. Field [dB(V/m)]	MIF (dB)	Audio Interference Level [dB(V/m)]	FCC Limit (dBV/m)	FCC Margin (dB)	Result	Excl Blocks per 5.5
E-Field Emissions																	
LTE TDD / Band 41 PC2	10	39750	None	2	16QAM	1	0	Acoustic	26.51	17.05	24.63	1.52	26.15	**35.00**	-8.85	**M4**	none
	10	40185	None	2	16QAM	1	0	Acoustic	26.67	16.06	24.11	1.48	25.59	**35.00**	-9.41	**M4**	none
	10	40620	None	2	16QAM	1	0	Acoustic	26.64	13.83	22.82	1.61	24.43	**35.00**	-10.57	**M4**	none
	10	41055	None	2	16QAM	1	0	Acoustic	26.35	12.82	22.16	1.60	23.76	**35.00**	-11.24	**M4**	none
	10	41490	None	2	16QAM	1	0	Acoustic	26.70	12.02	21.60	1.51	23.11	**35.00**	-11.89	**M4**	none

Table 11-5
HAC Data Summary for LTE TDD Band 48 E-field

Mode / Band	Bandwidth (MHz)	Channel	Accessory	UL-DL Config.	Mod.	RB Size	RB Offset	Scan Center	Conducted Power at BS (dBm)	Time Avg. Field (V/m)	Time Avg. Field [dB(V/m)]	MIF (dB)	Audio Interference Level [dB(V/m)]	FCC Limit (dBV/m)	FCC Margin (dB)	Result	Excl Blocks per 5.5
E-Field Emissions																	
LTE TDD / Band 48	20	55340	None	2	16QAM	1	0	Acoustic	23.17	5.84	15.33	1.48	16.81	**35.00**	-18.19	**M4**	none
	20	55773	None	2	16QAM	1	0	Acoustic	23.16	5.61	14.97	1.55	16.52	**35.00**	-18.48	**M4**	none
	20	56207	None	2	16QAM	1	0	Acoustic	23.20	5.36	14.58	1.48	16.06	**35.00**	-18.94	**M4**	none
	20	56640	None	2	16QAM	1	0	Acoustic	22.96	5.64	15.02	1.55	16.57	**35.00**	-18.43	**M4**	none

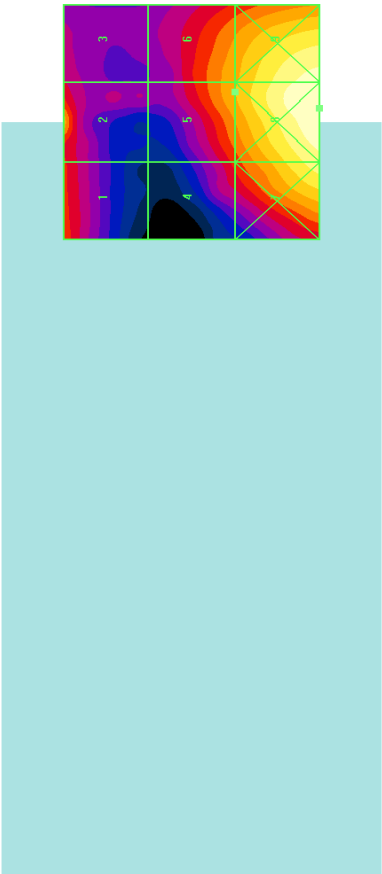

Figure 11-1
Sample E-field Scan Overlay
(See Test Setup Photographs for actual WD overlay)

© 2019 PCTEST Engineering Laboratory, Inc. All rights reserved. Unless otherwise specified, no part of this report may be reproduced or utilized in any part, form or by any means, electronic or mechanical, including photocopying and microfilm, without permission in writing from PCTEST Engineering Laboratory, Inc. If you have any questions about this international copyright or have an enquiry about obtaining additional rights to this report or assembly of contents thereof, please contact INFO@PCTEST.COM.

FCC ID:	ZNFG850UM
S/N:	03364

II. Worst-case Configuration Evaluation

Table 11-6
Peak Reading 360º Probe Rotation at Azimuth axis

Mode	Channel	Accessory	Scan Center	Time Avg. Field (V/m)	Time Avg. Field [dB(V/m)]	MIF (dB)	Audio Interference Level [dB(V/m)]	FCC Limit (dBV/m)	FCC Margin (dB)	Result	Excl Blocks per 5.5
Probe Rotation at Worst-Case											
GSM1900	661	Dual Display - Open	Acoustic	16.28	24.23	3.50	27.73	35.00	-7.27	M4	7,8,9

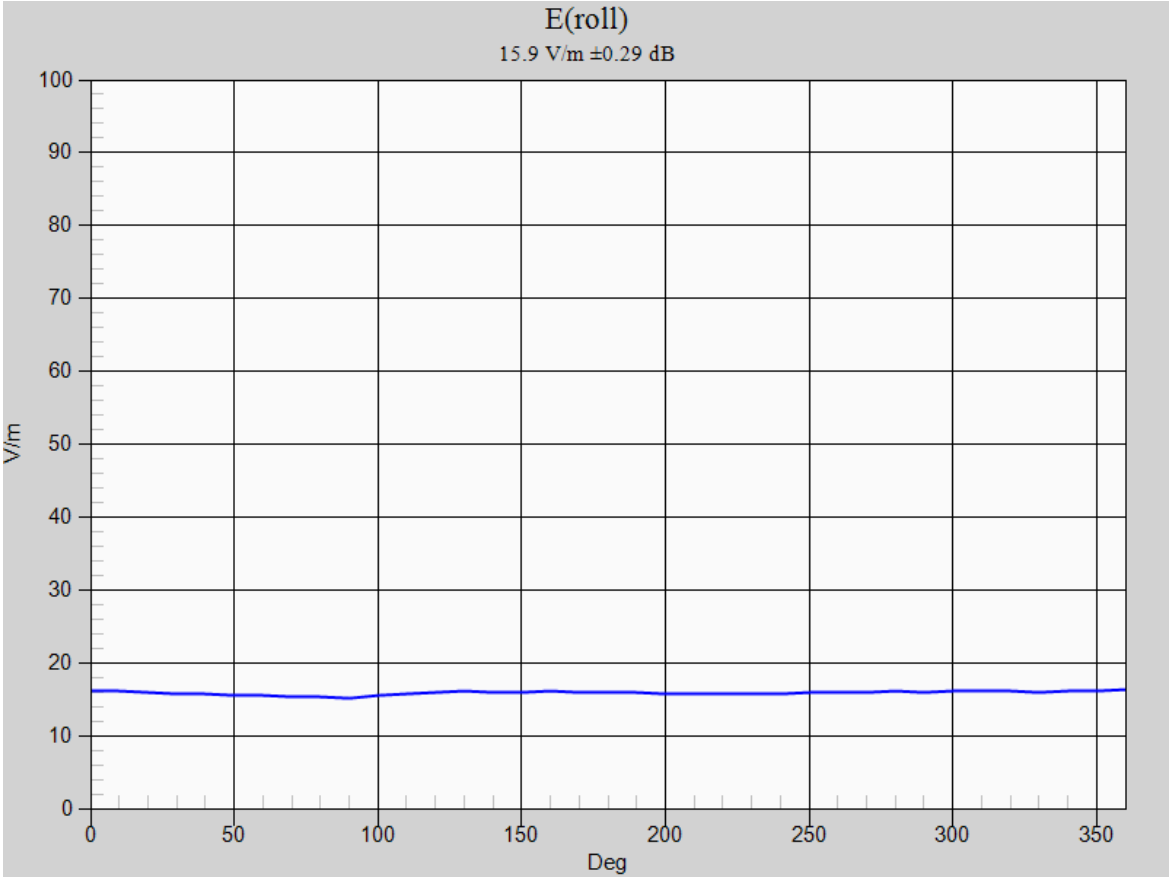

Figure 11-2
Worst-Case Probe Rotation about Azimuth axis

* Note: Locations of probe rotation (with and without exclusions) are shown in Figure 11-1 denoted by the green square markers.

© 2019 PCTEST Engineering Laboratory, Inc. All rights reserved. Unless otherwise specified, no part of this report may be reproduced or utilized in any part, form or by any means, electronic or mechanical, including photocopying and microfilm, without permission in writing from PCTEST Engineering Laboratory, Inc. If you have any questions about this international copyright or have an enquiry about obtaining additional rights to this report or assembly of contents thereof, please contact INFO@PCTEST.COM.

12. EQUIPMENT LIST

Table 12-1
Equipment List

Manufacturer	Model	Description	Cal Date	Cal Interval	Cal Due	Serial Number
Agilent	N5182A	MXG Vector Signal Generator	11/28/2018	Annual	11/28/2019	MY47420603
Agilent	E4438C	ESG Vector Signal Generator	5/23/2019	Annual	5/23/2020	MY47270002
Amplifier Research	15S1G6	Amplifier	N/A	CBT*	N/A	433978
Anritsu	ML2496A	Power Meter	10/21/2018	Annual	10/21/2019	1138001
Anritsu	MA2411B	Pulse Power Sensor	11/20/2018	Annual	11/20/2019	1339007
Anritsu	MA2411B	Pulse Power Sensor	11/20/2018	Annual	11/20/2019	1339008
Anritsu	MA24106A	USB Power Sensor	1/31/2019	Annual	1/31/2020	1520503
Anritsu	MA24106A	USB Power Sensor	1/31/2019	Annual	1/31/2020	1520501
Control Company	4040	Temperature / Humidity Monitor	2/28/2018	Biennial	2/28/2020	150761911
Mini-Circuits	NLP-1200+	Low Pass Filter DC to 1000 MHz	N/A	CBT*	N/A	N/A
Mini-Circuits	NLP-2950+	Low Pass Filter DC to 2700 MHz	N/A	CBT*	N/A	N/A
Mini-Circuits	BW-N20W5	Power Attenuator	N/A	CBT*	N/A	1226
Pasternack	PE2237-20	Bidirectional Coupler	N/A	CBT*	N/A	N/A
Rohde & Schwarz	CMW500	Radio Communication Tester	5/17/2019	Annual	5/17/2020	128635
Rohde & Schwarz	CMW500	Wideband Radio Communication Tester	1/30/2019	Annual	1/30/2020	162125
Seekonk	NC-100	Torque Wrench (8" lb)	5/23/2018	Biennial	5/23/2020	N/A
SPEAG	AIA	Audio Interference Analzyer	N/A	CBT*	N/A	1010
SPEAG	EF3DV3	Freespace E-field Probe	1/16/2019	Annual	1/16/2020	4035
SPEAG	CD835V3	Freespace 835 MHz Dipole	2/19/2019	Biennial	2/19/2021	1003
SPEAG	CD1880V3	Freespace 1880 MHz Dipole	2/19/2019	Biennial	2/19/2021	1137
SPEAG	CD2600V3	Freespace 2600MHz Dipole	2/19/2019	Biennial	2/19/2021	1012
SPEAG	CD3500V3	Freespace 3500MHz Dipole	1/15/2019	Biennial	1/25/2021	1005
SPEAG	DAE4	Dasy Data Acquisition Electronics	3/13/2019	Annual	3/13/2020	1415

Calibration traceable to the National Institute of Standards and Technology (NIST).

***Note: CBT (Calibrated Before Testing).** Prior to testing, the measurement paths containing a cable, attenuator, coupler or filter were connected to a calibrated source (i.e. a signal generator) to determine the losses of the measurement path. The power meter offset was then adjusted to compensate for the measurement system losses. This level offset is stored within the power meter before measurements are made. This calibration verification procedure applies to the system verification and output power measurements. The calibrated reading is then taken directly from the power meter after compensation of the losses for all final power measurements.

© 2019 PCTEST Engineering Laboratory, Inc. All rights reserved. Unless otherwise specified, no part of this report may be reproduced or utilized in any part, form or by any means, electronic or mechanical, including photocopying and microfilm, without permission in writing from PCTEST Engineering Laboratory, Inc. If you have any questions about this international copyright or have an enquiry about obtaining additional rights to this report or assembly of contents thereof, please contact INFO@PCTEST.COM.

13. MEASUREMENT UNCERTAINTY

Table 13-1
Uncertainty Estimation Table

Wireless Communications Device Near-Field Measurement Uncertainty Estimation							
Uncertainty Component	Data (dB)	Data Type	Prob. Dist.	Divisor	Ci (E)	Unc. (dB)	Notes/Comments
Measurement System							
RF System Reflections	0.50	Tolerance	N	1.00	1	0.50	* Refl. < -20 dB
Field Probe Calibration	0.21	Tolerance	N	1.00	1	0.21	
Field Probe Isotropy	0.01	Tolerance	N	1.00	1	0.01	
Field Probe Frequency Response	0.135	Tolerance	N	1.00	1	0.14	
Field Probe Linearity	0.013	Tolerance	N	1.00	1	0.01	
Modulation Interference Factor	0.20	Tolerance	R	1.73	1	0.12	Applicable for M-rating testing
Boundary Effects	0.105	Accuracy	R	1.73	1	0.06	*
Probe Positioning Accuracy	0.20	Accuracy	R	1.73	1	0.12	*
Probe Positioner	0.050	Accuracy	R	1.73	1	0.03	*
Extrapolation/Interpolation	0.045	Tolerance	R	1.73	1	0.03	*
Resolution to 2mm error	0.21	Tolerance	N	1.00	1	0.21	
System Detection Limit	0.05	Tolerance	R	1.73	1	0.03	*
Readout Electronics	0.015	Tolerance	N	1.00	1	0.02	*
Integration Time	0.11	Tolerance	R	1.73	1	0.06	*
Response Time	0.033	Tolerance	R	1.73	1	0.02	*
Phantom Thickness	0.10	Tolerance	R	1.73	1	0.06	*
System Repeatability (Field x 2=power)	0.17	Tolerance	N	1.00	1	0.17	*
Test Sample Related							
Device Positioning Vertical	0.2	Tolerance	R	1.73	1	0.12	*
Device Positioning Lateral	0.045	Tolerance	R	1.73	1	0.03	*
Device Holder and Phantom	0.1	Tolerance	R	1.73	1	0.06	*
Power Drift	0.21	Tolerance	R	1.73	1	0.12	
Combined Standard Uncertainty (k=1)						0.66	16.3%
Expanded Uncertainty [95% confidence]						1.31	32.6%
Expanded Uncertainty [95% confidence] on Field						0.66	16.3%

Notes:
1. Test equipments are calibrated according to techniques outlined in NIS81, NIS3003 and NIST Tech Note 1297. All equipments have traceability according to NIST. Measurement Uncertainties are defined in further detail in NIS 81 and NIST Tech Note 1297 and UKAS M3003.
2. * Uncertainty specifications from Schmidt & Partner Engineering AG (not site specific)

Measurement uncertainty reflects the quality and accuracy of a measured result as compared to the true value. Such statements are generally required when stating results of measurements so that it is clear to the intended audience that the results may differ when reproduced by different facilities. Measurement results vary due to the measurement uncertainty of the instrumentation, measurement technique, and test engineer. Most uncertainties are calculated using the tolerances of the instrumentation used in the measurement, the measurement setup variability, and the technique used in performing the test. While not generally included, the variability of the equipment under test also figures into the overall measurement uncertainty. Another component of the overall uncertainty is based on the variability of repeated measurements (so-called Type A uncertainty). This may mean that the Hearing Aid immunity tests may have to be repeated by taking down the test setup and resetting it up so that there are a statistically significant number of repeat measurements to identify the measurement uncertainty. By combining the repeat measurement results with that of the instrumentation chain using the technique contained in NIS 81 and NIS 3003, the overall measurement uncertainty was estimated.

© 2019 PCTEST Engineering Laboratory, Inc. All rights reserved. Unless otherwise specified, no part of this report may be reproduced or utilized in any part, form or by any means, electronic or mechanical, including photocopying and microfilm, without permission in writing from PCTEST Engineering Laboratory, Inc. If you have any questions about this international copyright or have an enquiry about obtaining additional rights to this report or assembly of contents thereof, please contact INFO@PCTEST.COM.

14. TEST DATA

See following Attached Pages for Test Data.

© 2019 PCTEST Engineering Laboratory, Inc. All rights reserved. Unless otherwise specified, no part of this report may be reproduced or utilized in any part, form or by any means, electronic or mechanical, including photocopying and microfilm, without permission in writing from PCTEST Engineering Laboratory, Inc. If you have any questions about this international copyright or have an enquiry about obtaining additional rights to this report or assembly of contents thereof, please contact INFO@PCTEST.COM.

Date: 8/26/2019

PCTEST Hearing-Aid Compatibility Facility

DUT: CD835V3 - SN1003

Type: CD835V3
Serial: 1003

Communication System: CW; Frequency: 835 MHz;

Measurement Standard: DASY5 (IEEE/IEC/ANSI C63.19-2011)

DASY5 Configuration:

- Probe: EF3DV3 - SN4035; Calibrated: 1/16/2019;
- Sensor-Surface: 0mm (Fix Surface)
- Electronics: DAE4 Sn1415; Calibrated: 3/13/2019
- Phantom: HAC Test Arch with AMCC; Type: SD HAC P01 BA;
- Measurement SW: DASY52, Version 52.10 (0);

835 MHz / 100mW HAC Dipole Validation at 15mm/Hearing Aid Compatibility Test (41x361x1):

Interpolated grid: dx=0.5000 mm, dy=0.5000 mm
Device Reference Point: 0, 0, -6.3 mm
Reference Value = 127.3 V/m; Power Drift = 0.04 dB
Applied MIF = 0.00 dB
Average Value of Peak (interpolated) = 111.8 V/m

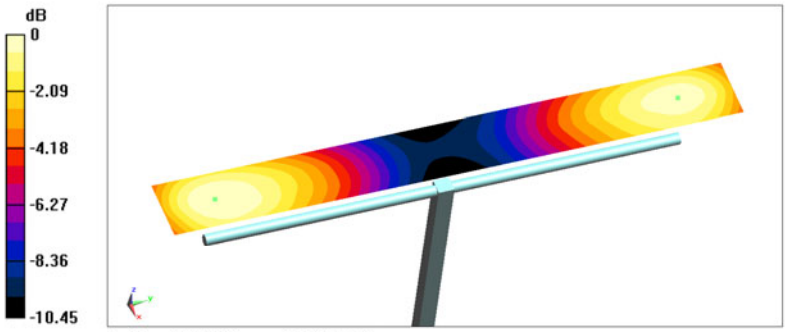

0 dB = 112.8 V/m = 41.05 dBV/m

© 2019 PCTEST Engineering Laboratory, Inc. All rights reserved. Unless otherwise specified, no part of this report may be reproduced or utilized in any part, form or by any means, electronic or mechanical, including photocopying and microfilm, without permission in writing from PCTEST Engineering Laboratory, Inc. If you have any questions about this international copyright or have an enquiry about obtaining additional rights to this report or assembly of contents thereof, please contact INFO@PCTEST.COM.

Date: 8/26/2019

PCTEST Hearing-Aid Compatibility Facility

DUT: CD1880V3 - SN1137

Type: CD1880V3
Serial: 1137

Communication System: CW; Frequency: 1880 MHz;

Measurement Standard: DASY5 (IEEE/IEC/ANSI C63.19-2011)

DASY5 Configuration:

- Probe: EF3DV3 - SN4035; Calibrated: 1/16/2019;
- Sensor-Surface: 0mm (Fix Surface)
- Electronics: DAE4 Sn1415; Calibrated: 3/13/2019
- Phantom: HAC Test Arch with AMCC; Type: SD HAC P01 BA;
- Measurement SW: DASY52, Version 52.10 (0);

1880 MHz / 100mW HAC Dipole Validation at 15mm/Hearing Aid Compatibility Test (41x181x1):

Interpolated grid: dx=0.5000 mm, dy=0.5000 mm
Device Reference Point: 0, 0, -6.3 mm
Reference Value = 148.3 V/m; Power Drift = 0.14 dB
Applied MIF = 0.00 dB
Average Value of Peak (interpolated) = 88.0 V/m

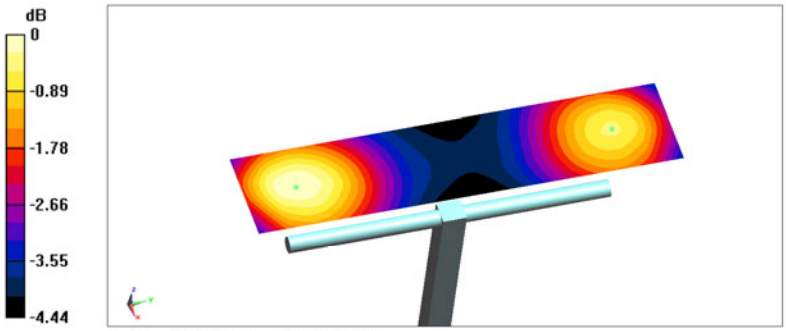

0 dB = 90.68 V/m = 39.15 dBV/m

© 2019 PCTEST Engineering Laboratory, Inc. All rights reserved. Unless otherwise specified, no part of this report may be reproduced or utilized in any part, form or by any means, electronic or mechanical, including photocopying and microfilm, without permission in writing from PCTEST Engineering Laboratory, Inc. If you have any questions about this international copyright or have an enquiry about obtaining additional rights to this report or assembly of contents thereof, please contact INFO@PCTEST.COM.

Date: 9/16/2019

PCTEST Hearing-Aid Compatibility Facility

DUT: CD1880V3 - SN1137

Type: CD1880V3
Serial: 1137

Communication System: CW; Frequency: 1880 MHz;

Measurement Standard: DASY5 (IEEE/IEC/ANSI C63.19-2011)

DASY5 Configuration:

- Probe: EF3DV3 - SN4035; Calibrated: 1/16/2019;
- Sensor-Surface: 0mm (Fix Surface)
- Electronics: DAE4 Sn1415; Calibrated: 3/13/2019
- Phantom: HAC Test Arch with AMCC; Type: SD HAC P01 BA;
- Measurement SW: DASY52, Version 52.10 (0);

1880 MHz / 100mW HAC Dipole Validation at 15mm/Hearing Aid Compatibility Test (41x181x1):

Interpolated grid: dx=0.5000 mm, dy=0.5000 mm
Device Reference Point: 0, 0, -6.3 mm
Reference Value = 150.2 V/m; Power Drift = -0.01 dB
Applied MIF = 0.00 dB
Average Value of Peak (interpolated) = 89.8 V/m

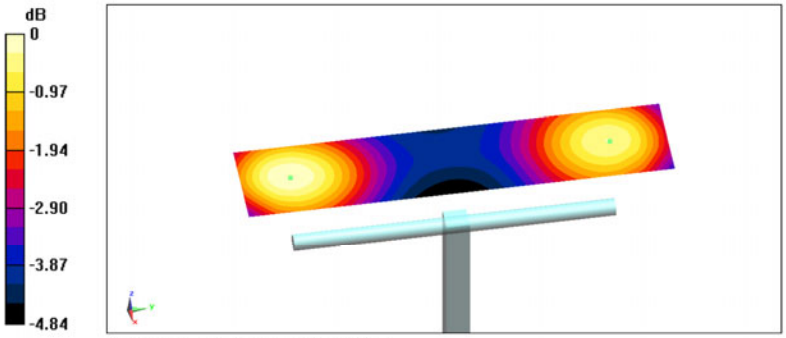

0 dB = 91.41 V/m = 39.22 dBV/m

© 2019 PCTEST Engineering Laboratory, Inc. All rights reserved. Unless otherwise specified, no part of this report may be reproduced or utilized in any part, form or by any means, electronic or mechanical, including photocopying and microfilm, without permission in writing from PCTEST Engineering Laboratory, Inc. If you have any questions about this international copyright or have an enquiry about obtaining additional rights to this report or assembly of contents thereof, please contact INFO@PCTEST.COM.

Date: 9/9/2019

PCTEST Hearing-Aid Compatibility Facility

DUT: CD2600V3 - SN1012

Type: CD2600V3
Serial: 1012

Communication System: CW; Frequency: 2600 MHz;

Measurement Standard: DASY5 (IEEE/IEC/ANSI C63.19-2011)

DASY5 Configuration:

- Probe: EF3DV3 - SN4035; Calibrated: 1/16/2019;
- Sensor-Surface: 0mm (Fix Surface)
- Electronics: DAE4 Sn1415; Calibrated: 3/13/2019
- Phantom: HAC Test Arch with AMCC; Type: SD HAC P01 BA;
- Measurement SW: DASY52, Version 52.10 (0);

2600 MHz / 100mW HAC Dipole Validation at 15mm/Hearing Aid Compatibility Test (41x181x1):

Interpolated grid: dx=0.5000 mm, dy=0.5000 mm
Device Reference Point: 0, 0, -6.3 mm
Reference Value = 67.27 V/m; Power Drift = -0.10 dB
Applied MIF = 0.00 dB
Average Value of Peak (interpolated) = 87.7 V/m

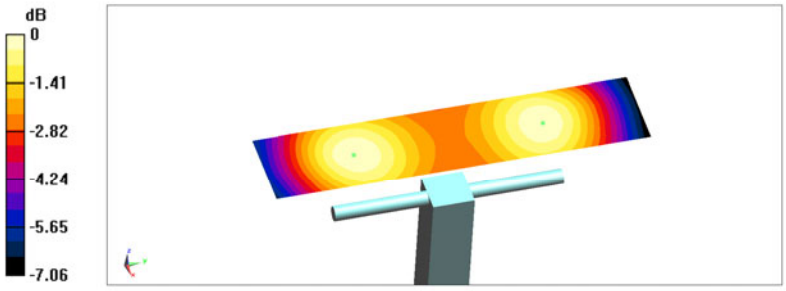

0 dB = 88.00 V/m = 38.89 dBV/m

© 2019 PCTEST Engineering Laboratory, Inc. All rights reserved. Unless otherwise specified, no part of this report may be reproduced or utilized in any part, form or by any means, electronic or mechanical, including photocopying and microfilm, without permission in writing from PCTEST Engineering Laboratory, Inc. If you have any questions about this international copyright or have an enquiry about obtaining additional rights to this report or assembly of contents thereof, please contact INFO@PCTEST.COM.

Date: 9/9/2019

PCTEST Hearing-Aid Compatibility Facility

DUT: CD3500V3 - SN1005

Type: CD3500V3
Serial: 1005

Communication System: CW; Frequency: 3500 MHz;

Measurement Standard: DASY5 (IEEE/IEC/ANSI C63.19-2011)

DASY5 Configuration:

- Probe: EF3DV3 - SN4035; Calibrated: 1/16/2019;
- Sensor-Surface: 0mm (Fix Surface)
- Electronics: DAE4 Sn1415; Calibrated: 3/13/2019
- Phantom: HAC Test Arch with AMCC; Type: SD HAC P01 BA;
- Measurement SW: DASY52, Version 52.10 (0);

3500 MHz / 100mW HAC Dipole Validation at 15mm/Hearing Aid Compatibility Test (41x181x1):

Interpolated grid: dx=0.5000 mm, dy=0.5000 mm
Device Reference Point: 0, 0, -6.3 mm
Reference Value = 39.35 V/m; Power Drift = -0.02 dB
Applied MIF = 0.00 dB
Average Value of Peak (interpolated) = 85.6 V/m

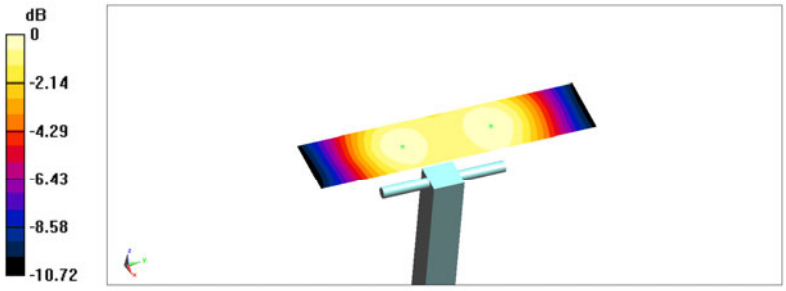

0 dB = 85.83 V/m = 38.67 dBV/m

© 2019 PCTEST Engineering Laboratory, Inc. All rights reserved. Unless otherwise specified, no part of this report may be reproduced or utilized in any part, form or by any means, electronic or mechanical, including photocopying and microfilm, without permission in writing from PCTEST Engineering Laboratory, Inc. If you have any questions about this international copyright or have an enquiry about obtaining additional rights to this report or assembly of contents thereof, please contact INFO@PCTEST.COM.

Date: 8/27/2019

PCTEST Hearing-Aid Compatibility Facility

DUT: ZNFG850UM

Type: Portable Handset
Serial: 03364
Backlight off
Duty Cycle: 1:8

Communication System: CDMA; Frequency: 824.7 MHz;

Measurement Standard: DASY5 (IEEE/IEC/ANSI C63.19-2011)

DASY5 Configuration:

- Probe: EF3DV3 - SN4035; Calibrated: 1/16/2019;
- Sensor-Surface: (Fix Surface)
- Electronics: DAE4 Sn1415; Calibrated: 3/13/2019
- Phantom: HAC Test Arch with AMCC; Type: SD HAC P01 BA;
- Measurement SW: DASY52, Version 52.10 (0);

Cellular CDMA Low Channel, No Accessory /Hearing Aid Compatibility Test (101x101x1):

Interpolated grid: dx=0.5000 mm, dy=0.5000 mm
Device Reference Point: 0, 0, -6.3 mm
Reference Value = 11.70 V/m; Power Drift = -0.15 dB
Applied MIF = 2.94 dB
RF audio interference level = 24.11 dBV/m
Emission category: M4

MIF scaled E-field

Grid 1 **M4** **23.75 dBV/m**	Grid 2 **M4** **24.11 dBV/m**	Grid 3 **M4** **23.4 dBV/m**
Grid 4 **M4** **22.03 dBV/m**	Grid 5 **M4** **22.61 dBV/m**	Grid 6 **M4** **22.36 dBV/m**
Grid 7 **M4** **19.81 dBV/m**	Grid 8 **M4** **20.76 dBV/m**	Grid 9 **M4** **20.67 dBV/m**

0 dB = 16.53 V/m = 24.37 dBV/m

© 2019 PCTEST Engineering Laboratory, Inc. All rights reserved. Unless otherwise specified, no part of this report may be reproduced or utilized in any part, form or by any means, electronic or mechanical, including photocopying and microfilm, without permission in writing from PCTEST Engineering Laboratory, Inc. If you have any questions about this international copyright or have an enquiry about obtaining additional rights to this report or assembly of contents thereof, please contact INFO@PCTEST.COM.

Date: 8/27/2019

PCTEST Hearing-Aid Compatibility Facility

DUT: ZNFG850UM

Type: Portable Handset
Serial: 03364
Backlight off
Duty Cycle: 1:8

Communication System: CDMA; Frequency: 1851.25 MHz;

Measurement Standard: DASY5 (IEEE/IEC/ANSI C63.19-2011)

DASY5 Configuration:

- Probe: EF3DV3 - SN4035; Calibrated: 1/16/2019;
- Sensor-Surface: (Fix Surface)
- Electronics: DAE4 Sn1415; Calibrated: 3/13/2019
- Phantom: HAC Test Arch with AMCC; Type: SD HAC P01 BA;
- Measurement SW: DASY52, Version 52.10 (0);

PCS CDMA Low Channel, No Accessory /Hearing Aid Compatibility Test (101x101x1):

Interpolated grid: dx=0.5000 mm, dy=0.5000 mm
Device Reference Point: 0, 0, -6.3 mm
Reference Value = 6.077 V/m; Power Drift = -0.11 dB
Applied MIF = 2.94 dB
RF audio interference level = 24.64 dBV/m
Emission category: M4

MIF scaled E-field

Grid 1 **M4** **22.89 dBV/m**	Grid 2 **M4** **22.52 dBV/m**	Grid 3 **M4** **21.16 dBV/m**
Grid 4 **M4** **19.09 dBV/m**	Grid 5 **M4** **20.6 dBV/m**	Grid 6 **M4** **20.82 dBV/m**
Grid 7 **M4** **23.51 dBV/m**	Grid 8 **M4** **24.64 dBV/m**	Grid 9 **M4** **24.03 dBV/m**

0 dB = 17.58 V/m = 24.90 dBV/m

© 2019 PCTEST Engineering Laboratory, Inc.

© 2019 PCTEST Engineering Laboratory, Inc. All rights reserved. Unless otherwise specified, no part of this report may be reproduced or utilized in any part, form or by any means, electronic or mechanical, including photocopying and microfilm, without permission in writing from PCTEST Engineering Laboratory, Inc. If you have any questions about this international copyright or have an enquiry about obtaining additional rights to this report or assembly of contents thereof, please contact INFO@PCTEST.COM.

Date: 8/27/2019

PCTEST Hearing-Aid Compatibility Facility

DUT: ZNFG850UM

Type: Portable Handset
Serial: 03364
Backlight off
Duty Cycle: 1:8.3

Communication System: GSM; Frequency: 824.2 MHz;

Measurement Standard: DASY5 (IEEE/IEC/ANSI C63.19-2011)

DASY5 Configuration:

- Probe: EF3DV3 - SN4035; Calibrated: 1/16/2019;
- Sensor-Surface: (Fix Surface)
- Electronics: DAE4 Sn1415; Calibrated: 3/13/2019
- Phantom: HAC Test Arch with AMCC; Type: SD HAC P01 BA;
- Measurement SW: DASY52, Version 52.10 (0);

GSM850 Low Channel, No Accessory /Hearing Aid Compatibility Test (101x101x1):

Interpolated grid: dx=0.5000 mm, dy=0.5000 mm
Device Reference Point: 0, 0, -6.3 mm
Reference Value = 32.31 V/m; Power Drift = -0.03 dB
Applied MIF = 3.54 dB
RF audio interference level = 33.39 dBV/m
Emission category: M4

MIF scaled E-field

Grid 1 **M4** **33.05 dBV/m**	Grid 2 **M4** **33.39 dBV/m**	Grid 3 **M4** **32.86 dBV/m**
Grid 4 **M4** **30.76 dBV/m**	Grid 5 **M4** **31.84 dBV/m**	Grid 6 **M4** **31.73 dBV/m**
Grid 7 **M4** **27.76 dBV/m**	Grid 8 **M4** **29.8 dBV/m**	Grid 9 **M4** **29.8 dBV/m**

0 dB = 46.53 V/m = 33.35 dBV/m

© 2019 PCTEST Engineering Laboratory, Inc.

© 2019 PCTEST Engineering Laboratory, Inc. All rights reserved. Unless otherwise specified, no part of this report may be reproduced or utilized in any part, form or by any means, electronic or mechanical, including photocopying and microfilm, without permission in writing from PCTEST Engineering Laboratory, Inc. If you have any questions about this international copyright or have an enquiry about obtaining additional rights to this report or assembly of contents thereof, please contact INFO@PCTEST.COM.

Date: 9/16/2019

PCTEST Hearing-Aid Compatibility Facility

DUT: ZNFG850UM

Type: Portable Handset
Serial: 03364
Backlight off
Duty Cycle: 1:8.3

Communication System: GSM; Frequency: 1880 MHz;

Measurement Standard: DASY5 (IEEE/IEC/ANSI C63.19-2011)

DASY5 Configuration:

- Probe: EF3DV3 - SN4035; Calibrated: 1/16/2019;
- Sensor-Surface: (Fix Surface)
- Electronics: DAE4 Sn1415; Calibrated: 3/13/2019
- Phantom: HAC Test Arch with AMCC; Type: SD HAC P01 BA;
- Measurement SW: DASY52, Version 52.10 (0);

GSM1900 Mid Channel, Dual Display - Open /Hearing Aid Compatibility Test (101x101x1):

Interpolated grid: dx=0.5000 mm, dy=0.5000 mm
Device Reference Point: 0, 0, -6.3 mm
Reference Value = 13.45 V/m; Power Drift = -0.11 dB
Applied MIF = 3.50 dB
RF audio interference level = 27.55 dBV/m
Emission category: M4

MIF scaled E-field

Grid 1 **M4** **26.03 dBV/m**	Grid 2 **M4** **27.48 dBV/m**	Grid 3 **M4** **24.81 dBV/m**
Grid 4 **M4** **25.71 dBV/m**	Grid 5 **M4** **27.55 dBV/m**	Grid 6 **M4** **27.48 dBV/m**
Grid 7 **M4** **29.54 dBV/m**	Grid 8 **M3** **30.52 dBV/m**	Grid 9 **M3** **30.19 dBV/m**

0 dB = 33.59 V/m = 30.52 dBV/m

© 2019 PCTEST Engineering Laboratory, Inc. All rights reserved. Unless otherwise specified, no part of this report may be reproduced or utilized in any part, form or by any means, electronic or mechanical, including photocopying and microfilm, without permission in writing from PCTEST Engineering Laboratory, Inc. If you have any questions about this international copyright or have an enquiry about obtaining additional rights to this report or assembly of contents thereof, please contact INFO@PCTEST.COM.

Date: 9/10/2019

PCTEST Hearing-Aid Compatibility Facility

DUT: ZNFG850UM

Type: Portable Handset
Serial: 03364
Backlight off
Duty Cycle: 1:4.67

Communication System: LTE TDD41; Frequency: 2593 MHz;

Measurement Standard: DASY5 (IEEE/IEC/ANSI C63.19-2011)

DASY5 Configuration:

- Probe: EF3DV3 - SN4035; Calibrated: 1/16/2019;
- Sensor-Surface: (Fix Surface)
- Electronics: DAE4 Sn1415; Calibrated: 3/13/2019
- Phantom: HAC Test Arch with AMCC; Type: SD HAC P01 BA;
- Measurement SW: DASY52, Version 52.10 (0);

Power Class 3 TDD LTE Band 41 Mid Channel, No Accessory, UL-DL 2, 15MHz BW, 16QAM, 1 RB, 0RB Offset

Hearing Aid Compatibility Test (101x101x1):

Interpolated grid: dx=0.5000 mm, dy=0.5000 mm
Device Reference Point: 0, 0, -6.3 mm
Reference Value = 7.718 V/m; Power Drift = 0.17 dB
Applied MIF = 1.59 dB
RF audio interference level = 23.94 dBV/m
Emission category: M4

MIF scaled E-field

Grid 1 **M4** **20 dBV/m**	Grid 2 **M4** **19.12 dBV/m**	Grid 3 **M4** **19.21 dBV/m**
Grid 4 **M4** **21.69 dBV/m**	Grid 5 **M4** **21.33 dBV/m**	Grid 6 **M4** **19.4 dBV/m**
Grid 7 **M4** **23.81 dBV/m**	Grid 8 **M4** **23.94 dBV/m**	Grid 9 **M4** **22.41 dBV/m**

0 dB = 16.51 V/m = 24.35 dBV/m

© 2019 PCTEST Engineering Laboratory, Inc. All rights reserved. Unless otherwise specified, no part of this report may be reproduced or utilized in any part, form or by any means, electronic or mechanical, including photocopying and microfilm, without permission in writing from PCTEST Engineering Laboratory, Inc. If you have any questions about this international copyright or have an enquiry about obtaining additional rights to this report or assembly of contents thereof, please contact INFO@PCTEST.COM.

Date: 9/10/2019

PCTEST Hearing-Aid Compatibility Facility

DUT: ZNFG850UM

Type: Portable Handset
Serial: 03364
Backlight off
Duty Cycle: 1:4.67

Communication System: LTE TDD41; Frequency: 2506 MHz;

Measurement Standard: DASY5 (IEEE/IEC/ANSI C63.19-2011)

DASY5 Configuration:

- Probe: EF3DV3 - SN4035; Calibrated: 1/16/2019;
- Sensor-Surface: (Fix Surface)
- Electronics: DAE4 Sn1415; Calibrated: 3/13/2019
- Phantom: HAC Test Arch with AMCC; Type: SD HAC P01 BA;
- Measurement SW: DASY52, Version 52.10 (0);

Power Class 2 TDD LTE Band 41 Low Channel, No Accessory, UL-DL 2, 10MHz BW, 16QAM, 1RB, 0RB Offset

Hearing Aid Compatibility Test (101x101x1):

Interpolated grid: dx=0.5000 mm, dy=0.5000 mm
Device Reference Point: 0, 0, -6.3 mm
Reference Value = 10.37 V/m; Power Drift = -0.14 dB
Applied MIF = 1.52 dB
RF audio interference level = 26.15 dBV/m
Emission category: M4

MIF scaled E-field

Grid 1 **M4** **23.46 dBV/m**	Grid 2 **M4** **20.9 dBV/m**	Grid 3 **M4** **19.93 dBV/m**
Grid 4 **M4** **24.64 dBV/m**	Grid 5 **M4** **23.29 dBV/m**	Grid 6 **M4** **21.1 dBV/m**
Grid 7 **M4** **25.9 dBV/m**	Grid 8 **M4** **26.15 dBV/m**	Grid 9 **M4** **23 dBV/m**

0 dB = 21.46 V/m = 26.63 dBV/m

© 2019 PCTEST Engineering Laboratory, Inc. All rights reserved. Unless otherwise specified, no part of this report may be reproduced or utilized in any part, form or by any means, electronic or mechanical, including photocopying and microfilm, without permission in writing from PCTEST Engineering Laboratory, Inc. If you have any questions about this international copyright or have an enquiry about obtaining additional rights to this report or assembly of contents thereof, please contact INFO@PCTEST.COM.

Date: 9/10/2019

PCTEST Hearing-Aid Compatibility Facility

DUT: ZNFG850UM

Type: Portable Handset
Serial: 03364
Backlight off
Duty Cycle: 1:4.67

Communication System: LTE Band 48; Frequency: 3560 MHz;

Measurement Standard: DASY5 (IEEE/IEC/ANSI C63.19-2011)

DASY5 Configuration:

- Probe: EF3DV3 - SN4035; Calibrated: 1/16/2019;
- Sensor-Surface: (Fix Surface)
- Electronics: DAE4 Sn1415; Calibrated: 3/13/2019
- Phantom: HAC Test Arch with AMCC; Type: SD HAC P01 BA;
- Measurement SW: DASY52, Version 52.10 (0);

Power Class 3 TDD LTE Band 48 Low Channel, No Accessory, UL-DL 2, 20MHz BW, 16QAM, 1RB, 0RB Offset

Hearing Aid Compatibility Test (101x101x1):

Interpolated grid: dx=0.5000 mm, dy=0.5000 mm
Device Reference Point: 0, 0, -6.3 mm
Reference Value = 3.679 V/m; Power Drift = -0.12 dB
Applied MIF = 1.48 dB
RF audio interference level = 16.81 dBV/m
Emission category: M4

MIF scaled E-field

Grid 1 **M4** **15.75 dBV/m**	Grid 2 **M4** **13.31 dBV/m**	Grid 3 **M4** **10.29 dBV/m**
Grid 4 **M4** **15.75 dBV/m**	Grid 5 **M4** **13.9 dBV/m**	Grid 6 **M4** **12.16 dBV/m**
Grid 7 **M4** **16.81 dBV/m**	Grid 8 **M4** **14.35 dBV/m**	Grid 9 **M4** **11.28 dBV/m**

© 2019 PCTEST Engineering Laboratory, Inc. All rights reserved. Unless otherwise specified, no part of this report may be reproduced or utilized in any part, form or by any means, electronic or mechanical, including photocopying and microfilm, without permission in writing from PCTEST Engineering Laboratory, Inc. If you have any questions about this international copyright or have an enquiry about obtaining additional rights to this report or assembly of contents thereof, please contact INFO@PCTEST.COM.

15. CALIBRATION CERTIFICATES

The following pages include the probe calibration used to evaluate HAC for the DUT.

© 2019 PCTEST Engineering Laboratory, Inc. All rights reserved. Unless otherwise specified, no part of this report may be reproduced or utilized in any part, form or by any means, electronic or mechanical, including photocopying and microfilm, without permission in writing from PCTEST Engineering Laboratory, Inc. If you have any questions about this international copyright or have an enquiry about obtaining additional rights to this report or assembly of contents thereof, please contact INFO@PCTEST.COM.

Calibration Laboratory of
Schmid & Partner
Engineering AG
Zeughausstrasse 43, 8004 Zurich, Switzerland

S Schweizerischer Kalibrierdienst
C Service suisse d'étalonnage
Servizio svizzero di taratura
S Swiss Calibration Service

Accredited by the Swiss Accreditation Service (SAS)
The Swiss Accreditation Service is one of the signatories to the EA Multilateral Agreement for the recognition of calibration certificates

Accreditation No.: SCS 0108

Client **PC Test**

Certificate No: EF3-4035_Jan19/2

CALIBRATION CERTIFICATE (Replacement of No: EF3-4035_Jan19)

Object	EF3DV3- SN:4035
Calibration procedure(s)	QA CAL-02.v9, QA CAL-25.v7 Calibration procedure for E-field probes optimized for close near field evaluations in air
Calibration date:	January 16, 2019

2/26/2019

This calibration certificate documents the traceability to national standards, which realize the physical units of measurements (SI).
The measurements and the uncertainties with confidence probability are given on the following pages and are part of the certificate.

All calibrations have been conducted in the closed laboratory facility: environment temperature (22 ± 3)°C and humidity < 70%.

Calibration Equipment used (M&TE critical for calibration)

Primary Standards	ID	Cal Date (Certificate No.)	Scheduled Calibration
Power meter NRP	SN: 104778	04-Apr-18 (No. 217-02672/02673)	Apr-19
Power sensor NRP-Z91	SN: 103244	04-Apr-18 (No. 217-02672)	Apr-19
Power sensor NRP-Z91	SN: 103245	04-Apr-18 (No. 217-02673)	Apr-19
Reference 20 dB Attenuator	SN: S5277 (20x)	04-Apr-18 (No. 217-02682)	Apr-19
DAE4	SN: 789	14-Jan-19 (No. DAE4-789_Jan19)	Jan-20
Reference Probe ER3DV6	SN: 2328	09-Oct-18 (No. ER3-2328_Oct18)	Oct-19
Secondary Standards	**ID**	**Check Date (in house)**	**Scheduled Check**
Power meter E4419B	SN: GB41293874	06-Apr-16 (in house check Jun-18)	In house check: Jun-20
Power sensor E4412A	SN: MY41498087	06-Apr-16 (in house check Jun-18)	In house check: Jun-20
Power sensor E4412A	SN: 000110210	06-Apr-16 (in house check Jun-18)	In house check: Jun-20
RF generator HP 8648C	SN: US3642U01700	04-Aug-99 (in house check Jun-18)	In house check: Jun-20
Network Analyzer E8358A	SN: US41080477	31-Mar-14 (in house check Oct-18)	In house check: Oct-19

	Name	Function	Signature
Calibrated by:	Manu Seitz	Laboratory Technician	
Approved by:	Katja Pokovic	Technical Manager	

Issued: February 11, 2019

This calibration certificate shall not be reproduced except in full without written approval of the laboratory.

© 2019 PCTEST Engineering Laboratory, Inc.

© 2019 PCTEST Engineering Laboratory, Inc. All rights reserved. Unless otherwise specified, no part of this report may be reproduced or utilized in any part, form or by any means, electronic or mechanical, including photocopying and microfilm, without permission in writing from PCTEST Engineering Laboratory, Inc. If you have any questions about this international copyright or have an enquiry about obtaining additional rights to this report or assembly of contents thereof, please contact INFO@PCTEST.COM.

Glossary:

NORMx,y,z	sensitivity in free space
DCP	diode compression point
CF	crest factor (1/duty_cycle) of the RF signal
A, B, C, D	modulation dependent linearization parameters
En	incident E-field orientation normal to probe axis
Ep	incident E-field orientation parallel to probe axis
Polarization φ	φ rotation around probe axis
Polarization ϑ	ϑ rotation around an axis that is in the plane normal to probe axis (at measurement center), i.e., ϑ = 0 is normal to probe axis
Connector Angle	information used in DASY system to align probe sensor X to the robot coordinate system

Calibration is Performed According to the Following Standards:

a) IEEE Std 1309-2005, " IEEE Standard for calibration of electromagnetic field sensors and probes, excluding antennas, from 9 kHz to 40 GHz", December 2005
b) CTIA Test Plan for Hearing Aid Compatibility, Rev 3.1.1, May 2017

Methods Applied and Interpretation of Parameters:

- *NORMx,y,z:* Assessed for E-field polarization ϑ = 0 for XY sensors and ϑ = 90 for Z sensor (f ≤ 900 MHz in TEM-cell; f > 1800 MHz: R22 waveguide).
- *NORM(f)x,y,z = NORMx,y,z * frequency_response* (see Frequency Response Chart).
- *DCPx,y,z:* DCP are numerical linearization parameters assessed based on the data of power sweep with CW signal (no uncertainty required). DCP does not depend on frequency nor media.
- *PAR:* PAR is the Peak to Average Ratio that is not calibrated but determined based on the signal characteristics
- *Ax,y,z; Bx,y,z; Cx,y,z; Dx,y,z; VRx,y,z: A, B, C, D* are numerical linearization parameters assessed based on the data of power sweep for specific modulation signal. The parameters do not depend on frequency nor media. *VR* is the maximum calibration range expressed in RMS voltage across the diode.
- *Spherical isotropy (3D deviation from isotropy)*: in a locally homogeneous field realized using an open waveguide setup.
- *Sensor Offset*: The sensor offset corresponds to the offset of virtual measurement center from the probe tip (on probe axis). No tolerance required.
- *Connector Angle*: The angle is assessed using the information gained by determining the *NORMx* (no uncertainty required).

© 2019 PCTEST Engineering Laboratory, Inc. All rights reserved. Unless otherwise specified, no part of this report may be reproduced or utilized in any part, form or by any means, electronic or mechanical, including photocopying and microfilm, without permission in writing from PCTEST Engineering Laboratory, Inc. If you have any questions about this international copyright or have an enquiry about obtaining additional rights to this report or assembly of contents thereof, please contact INFO@PCTEST.COM.

DASY/EASY - Parameters of Probe: EF3DV3 - SN:4035

Basic Calibration Parameters

	Sensor X	Sensor Y	Sensor Z	Unc (k=2)
Norm ($\mu V/(V/m)^2$)	0.90	0.74	1.20	± 10.1 %
DCP (mV)[B]	96.8	98.5	95.3	

Calibration results for Frequency Response (30 MHz – 6 GHz)

Frequency MHz	Target E-Field V/m	Measured E-field (En) V/m	Deviation E-normal in %	Measured E-field (Ep) V/m	Deviation E-normal in %	Unc (k=2) %
30	77.3	76.8	-0.6%	77.3	0.1%	± 5.1 %
100	77.3	78.2	1.2%	77.8	0.7%	± 5.1 %
450	77.1	78.2	1.5%	77.8	0.9%	± 5.1 %
600	77.1	77.8	0.9%	77.5	0.5%	± 5.1 %
750	77.3	77.7	0.5%	77.2	-0.1%	± 5.1 %
1800	140.3	136.9	-2.4%	137.2	-2.2%	± 5.1 %
2000	133.0	129.4	-2.8%	129.4	-2.7%	± 5.1 %
2200	124.8	121.5	-2.7%	122.7	-1.7%	± 5.1 %
2500	123.7	120.7	-2.4%	121.9	-1.5%	± 5.1 %
3000	78.8	74.8	-5.0%	76.1	-3.5%	± 5.1 %
3500	256.3	248.1	-3.2%	246.0	-4.0%	± 5.1 %
3700	249.7	239.2	-4.2%	239.0	-4.3%	± 5.1 %
5200	50.7	50.7	-0.1%	51.2	0.9%	± 5.1 %
5500	49.6	48.9	-1.5%	48.7	-1.9%	± 5.1 %
5800	48.9	49.1	0.4%	49.3	0.8%	± 5.1 %

Calibration Results for Modulation Response

UID	Communication System Name		A dB	B dB√μV	C	D dB	VR mV	Max dev.	Unc[E] (k=2)
0	CW	X	0.0	0.0	1.0	0.00	141.5	+ 3.3 %	± 4.7 %
		Y	0.0	0.0	1.0		125.6		
		Y	0.0	0.0	1.0		125.1		

The reported uncertainty of measurement is stated as the standard uncertainty of measurement multiplied by the coverage factor k=2, which for a normal distribution corresponds to a coverage probability of approximately 95%.

[B] Numerical linearization parameter: uncertainty not required.
[E] Uncertainty is determined using the max. deviation from linear response applying rectangular distribution and is expressed for the square of the field value.

© 2019 PCTEST Engineering Laboratory, Inc. All rights reserved. Unless otherwise specified, no part of this report may be reproduced or utilized in any part, form or by any means, electronic or mechanical, including photocopying and microfilm, without permission in writing from PCTEST Engineering Laboratory, Inc. If you have any questions about this international copyright or have an enquiry about obtaining additional rights to this report or assembly of contents thereof, please contact INFO@PCTEST.COM.

DASY/EASY - Parameters of Probe: EF3DV3 - SN:4035

Sensor Frequency Model Parameters

	Sensor X	Sensor Y	Sensor Z
Frequency Corr. (LF)	0.28	0.21	5.68
Frequency Corr. (HF)	2.82	2.82	2.82

Other Probe Parameters

Sensor Arrangement	Rectangular
Connector Angle (°)	57.9
Mechanical Surface Detection Mode	enabled
Optical Surface Detection Mode	disabled
Probe Overall Length	337 mm
Probe Body Diameter	12 mm
Tip Length	25 mm
Tip Diameter	4 mm
Probe Tip to Sensor X Calibration Point	1.5 mm
Probe Tip to Sensor Y Calibration Point	1.5 mm
Probe Tip to Sensor Z Calibration Point	1.5 mm

© 2019 PCTEST Engineering Laboratory, Inc. All rights reserved. Unless otherwise specified, no part of this report may be reproduced or utilized in any part, form or by any means, electronic or mechanical, including photocopying and microfilm, without permission in writing from PCTEST Engineering Laboratory, Inc. If you have any questions about this international copyright or have an enquiry about obtaining additional rights to this report or assembly of contents thereof, please contact INFO@PCTEST.COM.

Receiving Pattern (ϕ), ϑ = 0°

f=600 MHz,TEM,0°

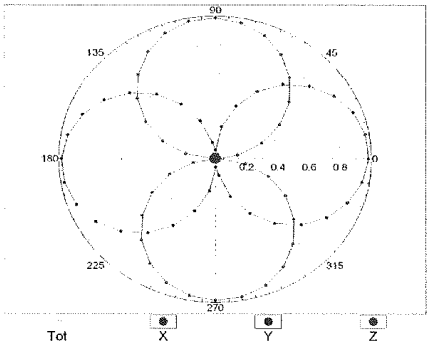

f=1800 MHz,R22,0°

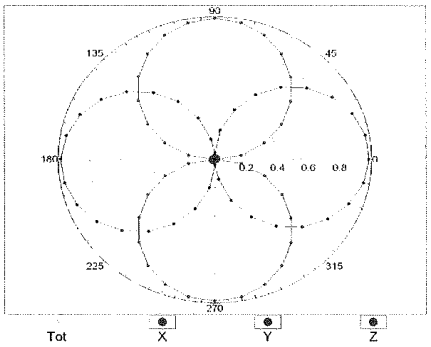

Receiving Pattern (ϕ), ϑ = 90°

f=600 MHz,TEM,90°

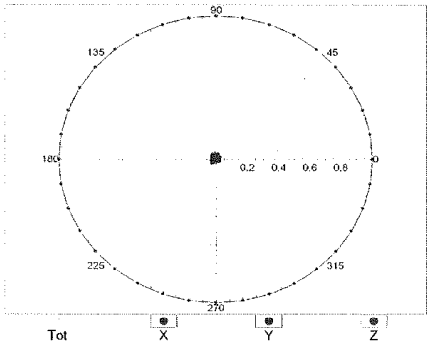

f=1800 MHz,R22,90°

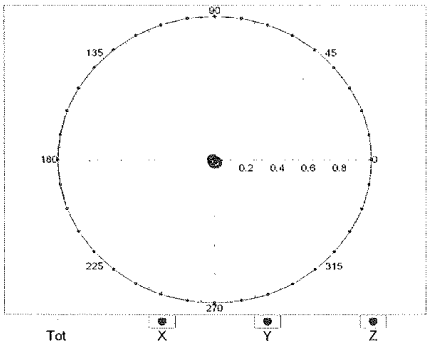

© 2019 PCTEST Engineering Laboratory, Inc. All rights reserved. Unless otherwise specified, no part of this report may be reproduced or utilized in any part, form or by any means, electronic or mechanical, including photocopying and microfilm, without permission in writing from PCTEST Engineering Laboratory, Inc. If you have any questions about this international copyright or have an enquiry about obtaining additional rights to this report or assembly of contents thereof, please contact INFO@PCTEST.COM.

Receiving Pattern (ϕ), ϑ = 0°

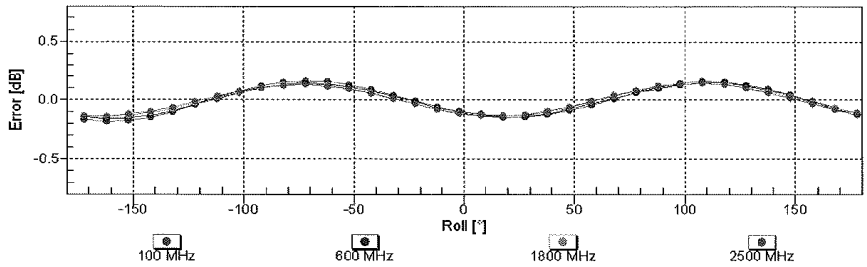

Uncertainty of Axial Isotropy Assessment: ± 0.5% (k=2)

Receiving Pattern (ϕ), ϑ = 90°

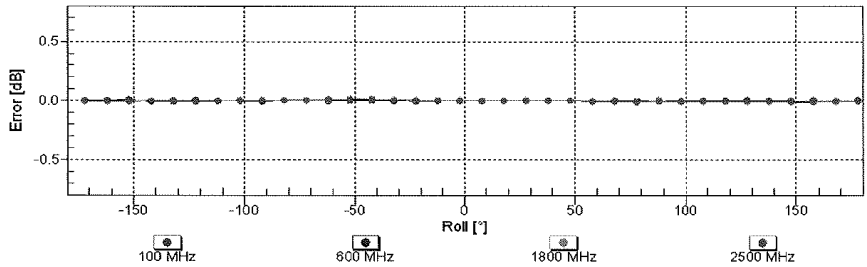

Uncertainty of Axial Isotropy Assessment: ± 0.5% (k=2)

© 2019 PCTEST Engineering Laboratory, Inc. All rights reserved. Unless otherwise specified, no part of this report may be reproduced or utilized in any part, form or by any means, electronic or mechanical, including photocopying and microfilm, without permission in writing from PCTEST Engineering Laboratory, Inc. If you have any questions about this international copyright or have an enquiry about obtaining additional rights to this report or assembly of contents thereof, please contact INFO@PCTEST.COM.

Dynamic Range f(E-field)
(TEM cell, f = 900 MHz)

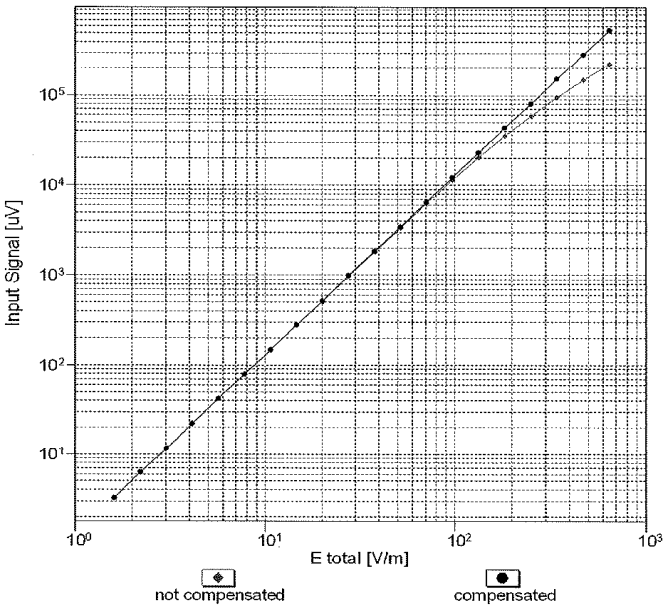

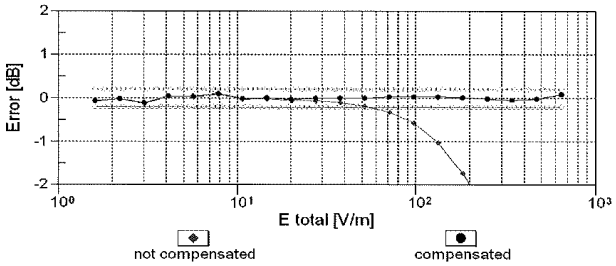

Uncertainty of Linearity Assessment: ± 0.6% (k=2)

© 2019 PCTEST Engineering Laboratory, Inc.

© 2019 PCTEST Engineering Laboratory, Inc. All rights reserved. Unless otherwise specified, no part of this report may be reproduced or utilized in any part, form or by any means, electronic or mechanical, including photocopying and microfilm, without permission in writing from PCTEST Engineering Laboratory, Inc. If you have any questions about this international copyright or have an enquiry about obtaining additional rights to this report or assembly of contents thereof, please contact INFO@PCTEST.COM.

Deviation from Isotropy in Air

Error (ϕ, ϑ), f = 900 MHz

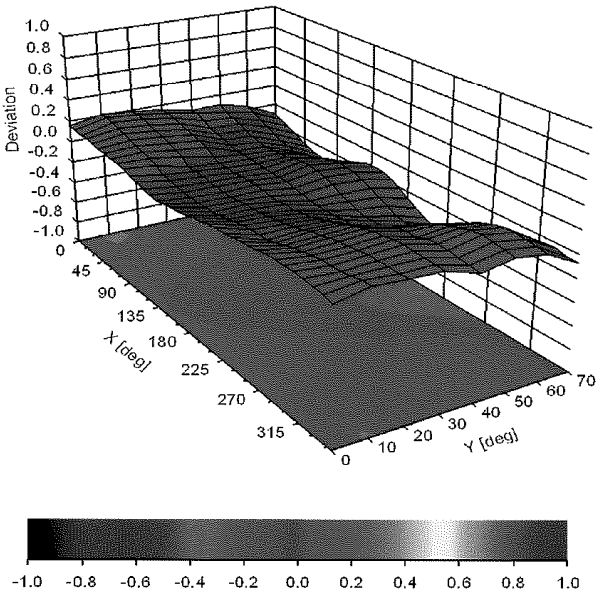

Uncertainty of Spherical Isotropy Assessment: ± 2.6% (k=2)

© 2019 PCTEST Engineering Laboratory, Inc.

© 2019 PCTEST Engineering Laboratory, Inc. All rights reserved. Unless otherwise specified, no part of this report may be reproduced or utilized in any part, form or by any means, electronic or mechanical, including photocopying and microfilm, without permission in writing from PCTEST Engineering Laboratory, Inc. If you have any questions about this international copyright or have an enquiry about obtaining additional rights to this report or assembly of contents thereof, please contact INFO@PCTEST.COM.

Calibration Laboratory of
Schmid & Partner
Engineering AG
Zeughausstrasse 43, 8004 Zurich, Switzerland

S Schweizerischer Kalibrierdienst
C Service suisse d'étalonnage
S Servizio svizzero di taratura
Swiss Calibration Service

Accredited by the Swiss Accreditation Service (SAS)
The Swiss Accreditation Service is one of the signatories to the EA Multilateral Agreement for the recognition of calibration certificates

Accreditation No.: SCS 0108

Client PC Test

Certificate No: CD835V3-1003_Feb19

CALIBRATION CERTIFICATE

Object	CD835V3 - SN: 1003
Calibration procedure(s)	QA CAL-20.v7 Calibration Procedure for Validation Sources in air
Calibration date:	February 19, 2019

VaA 3/19/2019

This calibration certificate documents the traceability to national standards, which realize the physical units of measurements (SI).
The measurements and the uncertainties with confidence probability are given on the following pages and are part of the certificate.

All calibrations have been conducted in the closed laboratory facility: environment temperature (22 ± 3)°C and humidity < 70%.

Calibration Equipment used (M&TE critical for calibration)

Primary Standards	ID #	Cal Date (Certificate No.)	Scheduled Calibration
Power meter NRP	SN: 104778	04-Apr-18 (No. 217-02672/02673)	Apr-19
Power sensor NRP-Z91	SN: 103244	04-Apr-18 (No. 217-02672)	Apr-19
Power sensor NRP-Z91	SN: 103245	04-Apr-18 (No. 217-02673)	Apr-19
Reference 20 dB Attenuator	SN: 5058 (20k)	04-Apr-18 (No. 217-02682)	Apr-19
Type-N mismatch combination	SN: 5047.2 / 06327	04-Apr-18 (No. 217-02683)	Apr-19
Probe EF3DV3	SN: 4013	03-Jan-19 (No. EF3-4013_Jan19)	Jan-20
DAE4	SN: 781	09-Jan-19 (No. DAE4-781_Jan19)	Jan-20

Secondary Standards	ID #	Check Date (in house)	Scheduled Check
Power meter Agilent 4419B	SN: GB42420191	09-Oct-09 (in house check Oct-17)	In house check: Oct-20
Power sensor HP E4412A	SN: US38485102	05-Jan-10 (in house check Oct-17)	In house check: Oct-20
Power sensor HP 8482A	SN: US37295597	09-Oct-09 (in house check Oct-17)	In house check: Oct-20
RF generator R&S SMT-06	SN: 832283/011	27-Aug-12 (in house check Oct-17)	In house check: Oct-20
Network Analyzer HP 8358A	SN: US41080477	31-Mar-14 (in house check Oct-18)	In house check: Oct-19

	Name	Function	Signature
Calibrated by:	Claudio Leubler	Laboratory Technician	
Approved by:	Katja Pokovic	Technical Manager	

Issued: February 20, 2019

This calibration certificate shall not be reproduced except in full without written approval of the laboratory.

© 2019 PCTEST Engineering Laboratory, Inc.

© 2019 PCTEST Engineering Laboratory, Inc. All rights reserved. Unless otherwise specified, no part of this report may be reproduced or utilized in any part, form or by any means, electronic or mechanical, including photocopying and microfilm, without permission in writing from PCTEST Engineering Laboratory, Inc. If you have any questions about this international copyright or have an enquiry about obtaining additional rights to this report or assembly of contents thereof, please contact INFO@PCTEST.COM.

References

[1] ANSI-C63.19-2011
American National Standard, Methods of Measurement of Compatibility between Wireless Communications Devices and Hearing Aids.

Methods Applied and Interpretation of Parameters:

- *Coordinate System:* y-axis is in the direction of the dipole arms. z-axis is from the basis of the antenna (mounted on the table) towards its feed point between the two dipole arms. x-axis is normal to the other axes. In coincidence with the standards [1], the measurement planes (probe sensor center) are selected to be at a distance of 15 mm above the top metal edge of the dipole arms.
- *Measurement Conditions:* Further details are available from the hardcopies at the end of the certificate. All figures stated in the certificate are valid at the frequency indicated. The forward power to the dipole connector is set with a calibrated power meter connected and monitored with an auxiliary power meter connected to a directional coupler. While the dipole under test is connected, the forward power is adjusted to the same level.
- *Antenna Positioning:* The dipole is mounted on a HAC Test Arch phantom using the matching dipole positioner with the arms horizontal and the feeding cable coming from the floor. The measurements are performed in a shielded room with absorbers around the setup to reduce the reflections.
  It is verified before the mounting of the dipole under the Test Arch phantom, that its arms are perfectly in a line. It is installed on the HAC dipole positioner with its arms parallel below the dielectric reference wire and able to move elastically in vertical direction without changing its relative position to the top center of the Test Arch phantom. The vertical distance to the probe is adjusted after dipole mounting with a DASY5 Surface Check job. Before the measurement, the distance between phantom surface and probe tip is verified. The proper measurement distance is selected by choosing the matching section of the HAC Test Arch phantom with the proper device reference point (upper surface of the dipole) and the matching grid reference point (tip of the probe) considering the probe sensor offset. The vertical distance to the probe is essential for the accuracy.
- *Feed Point Impedance and Return Loss:* These parameters are measured using a HP 8753E Vector Network Analyzer. The impedance is specified at the SMA connector of the dipole. The influence of reflections was eliminating by applying the averaging function while moving the dipole in the air, at least 70cm away from any obstacles.
- *E-field distribution:* E field is measured in the x-y-plane with an isotropic ER3D-field probe with 100 mW forward power to the antenna feed point. In accordance with [1], the scan area is 20mm wide, its length exceeds the dipole arm length (180 or 90mm). The sensor center is 15 mm (in z) above the metal top of the dipole arms. Two 3D maxima are available near the end of the dipole arms. Assuming the dipole arms are perfectly in one line, the average of these two maxima (in subgrid 2 and subgrid 8) is determined to compensate for any non-parallelity to the measurement plane as well as the sensor displacement. The E-field value stated as calibration value represents the maximum of the interpolated 3D-E-field, in the plane above the dipole surface.

The reported uncertainty of measurement is stated as the standard uncertainty of measurement multiplied by the coverage factor k=2, which for a normal distribution corresponds to a coverage probability of approximately 95%.

© 2019 PCTEST Engineering Laboratory, Inc. All rights reserved. Unless otherwise specified, no part of this report may be reproduced or utilized in any part, form or by any means, electronic or mechanical, including photocopying and microfilm, without permission in writing from PCTEST Engineering Laboratory, Inc. If you have any questions about this international copyright or have an enquiry about obtaining additional rights to this report or assembly of contents thereof, please contact INFO@PCTEST.COM.

Measurement Conditions

DASY system configuration, as far as not given on page 1.

DASY Version	DASY5	V52.10.2
Phantom	HAC Test Arch	
Distance Dipole Top - Probe Center	15 mm	
Scan resolution	dx, dy = 5 mm	
Frequency	835 MHz ± 1 MHz	
Input power drift	< 0.05 dB	

Maximum Field values at 835 MHz

E-field 15 mm above dipole surface	condition	**Interpolated maximum**
Maximum measured above high end	100 mW input power	105.2 V/m = 40.44 dBV/m
Maximum measured above low end	100 mW input power	105.1 V/m = 40.43 dBV/m
Averaged maximum above arm	100 mW input power	**105.2 V/m ± 12.8 % (k=2)**

Appendix (Additional assessments outside the scope of SCS 0108)

Antenna Parameters

Frequency	**Return Loss**	**Impedance**
800 MHz	17.6 dB	40.4 Ω - 7.2 jΩ
835 MHz	25.8 dB	52.2 Ω + 4.7 jΩ
880 MHz	16.9 dB	62.1 Ω - 10.5 jΩ
900 MHz	16.9 dB	52.2 Ω - 14.6 jΩ
945 MHz	21.6 dB	51.8 Ω + 8.3 jΩ

3.2 Antenna Design and Handling

The calibration dipole has a symmetric geometry with a built-in two stub matching network, which leads to the enhanced bandwidth.
The dipole is built of standard semirigid coaxial cable. The internal matching line is open ended. The antenna is therefore open for DC signals.
Do not apply force to dipole arms, as they are liable to bend. The soldered connections near the feedpoint may be damaged. After excessive mechanical stress or overheating, check the impedance characteristics to ensure that the internal matching network is not affected.

After long term use with 40W radiated power, only a slight warming of the dipole near the feedpoint can be measured.

© 2019 PCTEST Engineering Laboratory, Inc.

© 2019 PCTEST Engineering Laboratory, Inc. All rights reserved. Unless otherwise specified, no part of this report may be reproduced or utilized in any part, form or by any means, electronic or mechanical, including photocopying and microfilm, without permission in writing from PCTEST Engineering Laboratory, Inc. If you have any questions about this international copyright or have an enquiry about obtaining additional rights to this report or assembly of contents thereof, please contact INFO@PCTEST.COM.

Impedance Measurement Plot

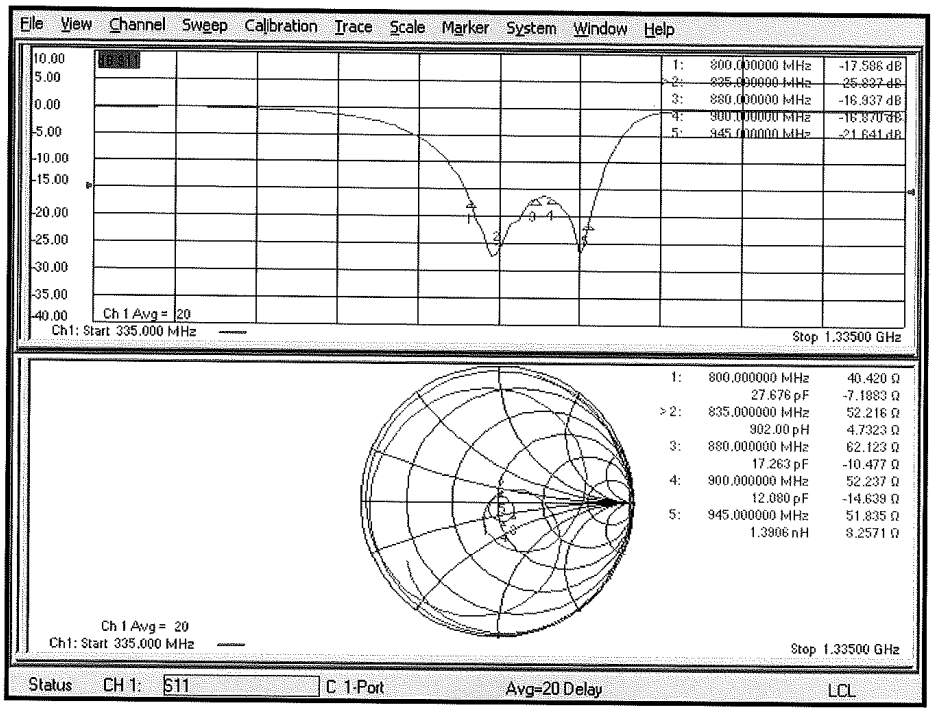

© 2019 PCTEST Engineering Laboratory, Inc.

© 2019 PCTEST Engineering Laboratory, Inc. All rights reserved. Unless otherwise specified, no part of this report may be reproduced or utilized in any part, form or by any means, electronic or mechanical, including photocopying and microfilm, without permission in writing from PCTEST Engineering Laboratory, Inc. If you have any questions about this international copyright or have an enquiry about obtaining additional rights to this report or assembly of contents thereof, please contact INFO@PCTEST.COM.

DASY5 E-field Result

Date: 19.02.2019

Test Laboratory: SPEAG Lab2

DUT: HAC-Dipole 835 MHz; Type: CD835V3; Serial: CD835V3 - SN: 1003

Communication System: UID 0 - CW ; Frequency: 835 MHz
Medium parameters used: $\sigma = 0$ S/m, $\varepsilon_r = 1$; $\rho = 0$ kg/m^3
Phantom section: RF Section
Measurement Standard: DASY5 (IEEE/IEC/ANSI C63.19-2011)

DASY52 Configuration:

- Probe: EF3DV3 - SN4013; ConvF(1, 1, 1) @ 835 MHz; Calibrated: 03.01.2019
- Sensor-Surface: (Fix Surface)
- Electronics: DAE4 Sn781; Calibrated: 09.01.2019
- Phantom: HAC Test Arch with AMCC; Type: SD HAC P01 BA; Serial: 1070
- DASY52 52.10.2(1495); SEMCAD X 14.6.12(7450)

Dipole E-Field measurement @ 835MHz/E-Scan - 835MHz d=15mm/Hearing Aid Compatibility Test (41x361x1):
Interpolated grid: dx=0.5000 mm, dy=0.5000 mm
Device Reference Point: 0, 0, -6.3 mm
Reference Value = 127.3 V/m; Power Drift = 0.04 dB
Applied MIF = 0.00 dB
RF audio interference level = 40.44 dBV/m
Emission category: M3

MIF scaled E-field

Grid 1 **M4** **39.75 dBV/m**	Grid 2 **M3** **40.43 dBV/m**	Grid 3 **M3** **40.43 dBV/m**
Grid 4 **M4** **35.35 dBV/m**	Grid 5 **M4** **35.75 dBV/m**	Grid 6 **M4** **35.73 dBV/m**
Grid 7 **M3** **40.15 dBV/m**	Grid 8 **M3** **40.44 dBV/m**	Grid 9 **M3** **40.36 dBV/m**

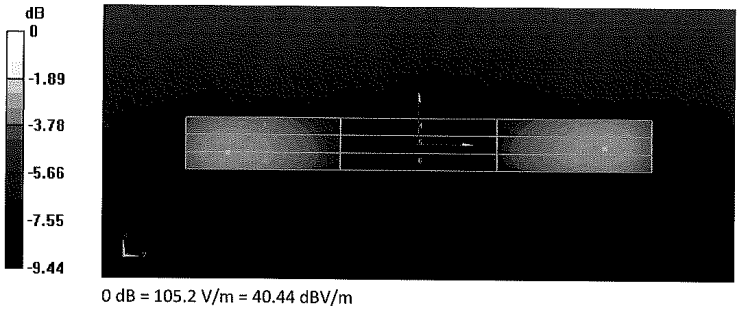

0 dB = 105.2 V/m = 40.44 dBV/m

© 2019 PCTEST Engineering Laboratory, Inc.

© 2019 PCTEST Engineering Laboratory, Inc. All rights reserved. Unless otherwise specified, no part of this report may be reproduced or utilized in any part, form or by any means, electronic or mechanical, including photocopying and microfilm, without permission in writing from PCTEST Engineering Laboratory, Inc. If you have any questions about this international copyright or have an enquiry about obtaining additional rights to this report or assembly of contents thereof, please contact INFO@PCTEST.COM.

Calibration Laboratory of
Schmid & Partner
Engineering AG
Zeughausstrasse 43, 8004 Zurich, Switzerland

S Schweizerischer Kalibrierdienst
C Service suisse d'étalonnage
Servizio svizzero di taratura
S Swiss Calibration Service

Accredited by the Swiss Accreditation Service (SAS)
The Swiss Accreditation Service is one of the signatories to the EA Multilateral Agreement for the recognition of calibration certificates

Accreditation No.: SCS 0108

Client PC Test

Certificate No: CD1880V3-1137_Feb19

CALIBRATION CERTIFICATE

Object	CD1880V3 - SN: 1137
Calibration procedure(s)	QA CAL-20.v7 Calibration Procedure for Validation Sources in air
Calibration date:	February 19, 2019

Valt 3/19/2019

This calibration certificate documents the traceability to national standards, which realize the physical units of measurements (SI).
The measurements and the uncertainties with confidence probability are given on the following pages and are part of the certificate.

All calibrations have been conducted in the closed laboratory facility: environment temperature (22 ± 3)°C and humidity < 70%.

Calibration Equipment used (M&TE critical for calibration)

Primary Standards	ID #	Cal Date (Certificate No.)	Scheduled Calibration
Power meter NRP	SN: 104778	04-Apr-18 (No. 217-02672/02673)	Apr-19
Power sensor NRP-Z91	SN: 103244	04-Apr-18 (No. 217-02672)	Apr-19
Power sensor NRP-Z91	SN: 103245	04-Apr-18 (No. 217-02673)	Apr-19
Reference 20 dB Attenuator	SN: 5058 (20k)	04-Apr-18 (No. 217-02682)	Apr-19
Type-N mismatch combination	SN: 5047.2 / 06327	04-Apr-18 (No. 217-02683)	Apr-19
Probe EF3DV3	SN: 4013	03-Jan-19 (No. EF3-4013_Jan19)	Jan-20
DAE4	SN: 781	09-Jan-19 (No. DAE4-781_Jan19)	Jan-20

Secondary Standards	ID #	Check Date (in house)	Scheduled Check
Power meter Agilent 4419B	SN: GB42420191	09-Oct-09 (in house check Oct-17)	In house check: Oct-20
Power sensor HP E4412A	SN: US38485102	05-Jan-10 (in house check Oct-17)	In house check: Oct-20
Power sensor HP 8482A	SN: US37295597	09-Oct-09 (in house check Oct-17)	In house check: Oct-20
RF generator R&S SMT-06	SN: 832283/011	27-Aug-12 (in house check Oct-17)	In house check: Oct-20
Network Analyzer HP 8358A	SN: US41080477	31-Mar-14 (in house check Oct-18)	In house check: Oct-19

	Name	Function	Signature
Calibrated by:	Claudio Leubler	Laboratory Technician	
Approved by:	Katja Pokovic	Technical Manager	

Issued: February 20, 2019

This calibration certificate shall not be reproduced except in full without written approval of the laboratory.

© 2019 PCTEST Engineering Laboratory, Inc. All rights reserved. Unless otherwise specified, no part of this report may be reproduced or utilized in any part, form or by any means, electronic or mechanical, including photocopying and microfilm, without permission in writing from PCTEST Engineering Laboratory, Inc. If you have any questions about this international copyright or have an enquiry about obtaining additional rights to this report or assembly of contents thereof, please contact INFO@PCTEST.COM.

References

[1] ANSI-C63.19-2011
American National Standard, Methods of Measurement of Compatibility between Wireless Communications Devices and Hearing Aids.

Methods Applied and Interpretation of Parameters:

- *Coordinate System:* y-axis is in the direction of the dipole arms. z-axis is from the basis of the antenna (mounted on the table) towards its feed point between the two dipole arms. x-axis is normal to the other axes. In coincidence with the standards [1], the measurement planes (probe sensor center) are selected to be at a distance of 15 mm above the top metal edge of the dipole arms.
- *Measurement Conditions:* Further details are available from the hardcopies at the end of the certificate. All figures stated in the certificate are valid at the frequency indicated. The forward power to the dipole connector is set with a calibrated power meter connected and monitored with an auxiliary power meter connected to a directional coupler. While the dipole under test is connected, the forward power is adjusted to the same level.
- *Antenna Positioning:* The dipole is mounted on a HAC Test Arch phantom using the matching dipole positioner with the arms horizontal and the feeding cable coming from the floor. The measurements are performed in a shielded room with absorbers around the setup to reduce the reflections.
  It is verified before the mounting of the dipole under the Test Arch phantom, that its arms are perfectly in a line. It is installed on the HAC dipole positioner with its arms parallel below the dielectric reference wire and able to move elastically in vertical direction without changing its relative position to the top center of the Test Arch phantom. The vertical distance to the probe is adjusted after dipole mounting with a DASY5 Surface Check job. Before the measurement, the distance between phantom surface and probe tip is verified. The proper measurement distance is selected by choosing the matching section of the HAC Test Arch phantom with the proper device reference point (upper surface of the dipole) and the matching grid reference point (tip of the probe) considering the probe sensor offset. The vertical distance to the probe is essential for the accuracy.
- *Feed Point Impedance and Return Loss:* These parameters are measured using a HP 8753E Vector Network Analyzer. The impedance is specified at the SMA connector of the dipole. The influence of reflections was eliminating by applying the averaging function while moving the dipole in the air, at least 70cm away from any obstacles.
- *E-field distribution:* E field is measured in the x-y-plane with an isotropic ER3D-field probe with 100 mW forward power to the antenna feed point. In accordance with [1], the scan area is 20mm wide, its length exceeds the dipole arm length (180 or 90mm). The sensor center is 15 mm (in z) above the metal top of the dipole arms. Two 3D maxima are available near the end of the dipole arms. Assuming the dipole arms are perfectly in one line, the average of these two maxima (in subgrid 2 and subgrid 8) is determined to compensate for any non-parallelity to the measurement plane as well as the sensor displacement. The E-field value stated as calibration value represents the maximum of the interpolated 3D-E-field, in the plane above the dipole surface.

The reported uncertainty of measurement is stated as the standard uncertainty of measurement multiplied by the coverage factor k=2, which for a normal distribution corresponds to a coverage probability of approximately 95%.

© 2019 PCTEST Engineering Laboratory, Inc. All rights reserved. Unless otherwise specified, no part of this report may be reproduced or utilized in any part, form or by any means, electronic or mechanical, including photocopying and microfilm, without permission in writing from PCTEST Engineering Laboratory, Inc. If you have any questions about this international copyright or have an enquiry about obtaining additional rights to this report or assembly of contents thereof, please contact INFO@PCTEST.COM.

Measurement Conditions

DASY system configuration, as far as not given on page 1.

DASY Version	DASY5	V52.10.2
Phantom	HAC Test Arch	
Distance Dipole Top - Probe Center	15 mm	
Scan resolution	dx, dy = 5 mm	
Frequency	1730 MHz ± 1 MHz 1880 MHz ± 1 MHz	
Input power drift	< 0.05 dB	

Maximum Field values at 1730 MHz

E-field 15 mm above dipole surface	condition	**Interpolated maximum**
Maximum measured above high end	100 mW input power	95.0 V/m = 39.55 dBV/m
Maximum measured above low end	100 mW input power	94.9 V/m = 39.55 dBV/m
Averaged maximum above arm	100 mW input power	**95.0 V/m ± 12.8 % (k=2)**

Maximum Field values at 1880 MHz

E-field 15 mm above dipole surface	condition	**Interpolated maximum**
Maximum measured above high end	100 mW input power	88.9 V/m = 38.98 dBV/m
Maximum measured above low end	100 mW input power	86.6 V/m = 38.75 dBV/m
Averaged maximum above arm	100 mW input power	**87.8 V/m ± 12.8 % (k=2)**

© 2019 PCTEST Engineering Laboratory, Inc.

© 2019 PCTEST Engineering Laboratory, Inc. All rights reserved. Unless otherwise specified, no part of this report may be reproduced or utilized in any part, form or by any means, electronic or mechanical, including photocopying and microfilm, without permission in writing from PCTEST Engineering Laboratory, Inc. If you have any questions about this international copyright or have an enquiry about obtaining additional rights to this report or assembly of contents thereof, please contact INFO@PCTEST.COM.

Appendix (Additional assessments outside the scope of SCS 0108)

Antenna Parameters

Nominal Frequencies

Frequency	Return Loss	Impedance
1730 MHz	22.5 dB	54.4 Ω + 6.5 jΩ
1880 MHz	21.1 dB	55.9 Ω + 7.2 jΩ
1900 MHz	21.0 dB	59.0 Ω + 3.6 jΩ
1950 MHz	27.3 dB	53.0 Ω - 3.3 jΩ
2000 MHz	20.3 dB	42.4 Ω + 4.8 jΩ

3.2 Antenna Design and Handling

The calibration dipole has a symmetric geometry with a built-in two stub matching network, which leads to the enhanced bandwidth.
The dipole is built of standard semirigid coaxial cable. The internal matching line is open ended. The antenna is therefore open for DC signals.
Do not apply force to dipole arms, as they are liable to bend. The soldered connections near the feedpoint may be damaged. After excessive mechanical stress or overheating, check the impedance characteristics to ensure that the internal matching network is not affected.

After long term use with 40W radiated power, only a slight warming of the dipole near the feedpoint can be measured.

© 2019 PCTEST Engineering Laboratory, Inc.

© 2019 PCTEST Engineering Laboratory, Inc. All rights reserved. Unless otherwise specified, no part of this report may be reproduced or utilized in any part, form or by any means, electronic or mechanical, including photocopying and microfilm, without permission in writing from PCTEST Engineering Laboratory, Inc. If you have any questions about this international copyright or have an enquiry about obtaining additional rights to this report or assembly of contents thereof, please contact INFO@PCTEST.COM.

Impedance Measurement Plot

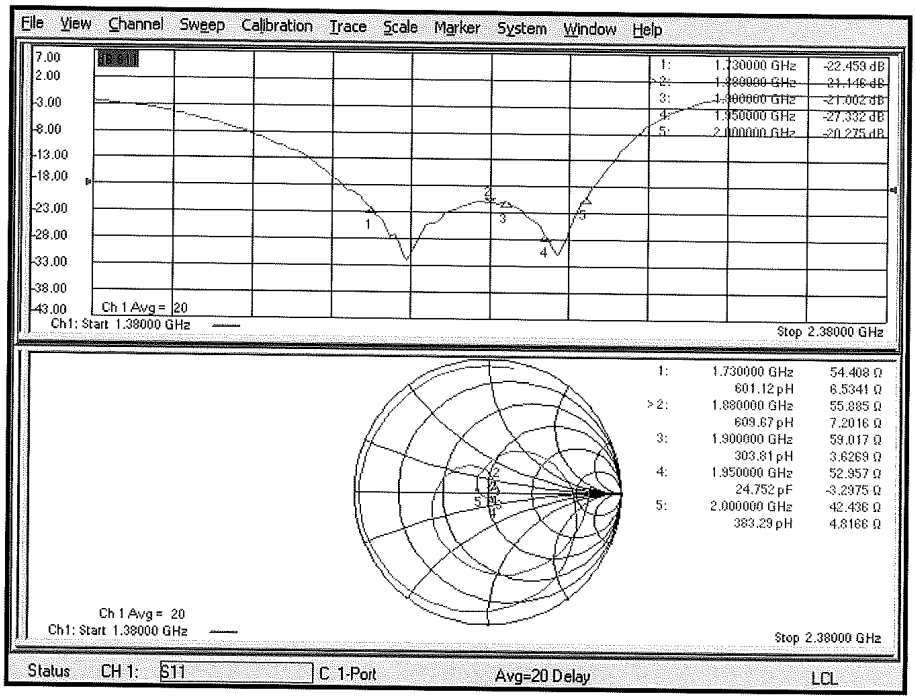

© 2019 PCTEST Engineering Laboratory, Inc. All rights reserved. Unless otherwise specified, no part of this report may be reproduced or utilized in any part, form or by any means, electronic or mechanical, including photocopying and microfilm, without permission in writing from PCTEST Engineering Laboratory, Inc. If you have any questions about this international copyright or have an enquiry about obtaining additional rights to this report or assembly of contents thereof, please contact INFO@PCTEST.COM.

DASY5 E-field Result

Date: 19.02.2019

Test Laboratory: SPEAG Lab2

DUT: HAC Dipole 1880 MHz; Type: CD1880V3; Serial: CD1880V3 - SN: 1137

Communication System: UID 0 - CW ; Frequency: 1880 MHz, Frequency: 1730 MHz
Medium parameters used: $\sigma = 0$ S/m, $\varepsilon_r = 1$; $\rho = 0$ kg/m^3
Phantom section: RF Section
Measurement Standard: DASY5 (IEEE/IEC/ANSI C63.19-2011)

DASY52 Configuration:

- Probe: EF3DV3 - SN4013; ConvF(1, 1, 1) @ 1880 MHz, ConvF(1, 1, 1) @ 1730 MHz; Calibrated: 03.01.2019
- Sensor-Surface: (Fix Surface)
- Electronics: DAE4 Sn781; Calibrated: 09.01.2019
- Phantom: HAC Test Arch with AMCC; Type: SD HAC P01 BA; Serial: 1070
- DASY52 52.10.2(1495); SEMCAD X 14.6.12(7450)

Dipole E-Field measurement @ 1880MHz/E-Scan - 1880MHz d=15mm/Hearing Aid Compatibility Test (41x181x1):
Interpolated grid: dx=0.5000 mm, dy=0.5000 mm
Device Reference Point: 0, 0, -6.3 mm
Reference Value = 151.5 V/m; Power Drift = 0.02 dB
Applied MIF = 0.00 dB
RF audio interference level = 38.98 dBV/m
Emission category: M2

MIF scaled E-field

Grid 1 **M2** **38.55 dBV/m**	Grid 2 **M2** **38.98 dBV/m**	Grid 3 **M2** **38.93 dBV/m**
Grid 4 **M2** **35.71 dBV/m**	Grid 5 **M2** **35.97 dBV/m**	Grid 6 **M2** **35.96 dBV/m**
Grid 7 **M2** **38.31 dBV/m**	Grid 8 **M2** **38.75 dBV/m**	Grid 9 **M2** **38.73 dBV/m**

© 2019 PCTEST Engineering Laboratory, Inc.

© 2019 PCTEST Engineering Laboratory, Inc. All rights reserved. Unless otherwise specified, no part of this report may be reproduced or utilized in any part, form or by any means, electronic or mechanical, including photocopying and microfilm, without permission in writing from PCTEST Engineering Laboratory, Inc. If you have any questions about this international copyright or have an enquiry about obtaining additional rights to this report or assembly of contents thereof, please contact INFO@PCTEST.COM.

Dipole E-Field measurement @ 1880MHz /E-Scan - 1730MHz d=15mm/Hearing Aid Compatibility Test (41x181x1):
Interpolated grid: dx=0.5000 mm, dy=0.5000 mm
Device Reference Point: 0, 0, -6.3 mm
Reference Value = 165.0 V/m; Power Drift = 0.03 dB
Applied MIF = 0.00 dB
RF audio interference level = 39.55 dBV/m
Emission category: M2

MIF scaled E-field

Grid 1 **M2** **39.09 dBV/m**	Grid 2 **M2** **39.55 dBV/m**	Grid 3 **M2** **39.51 dBV/m**
Grid 4 **M2** **36.57 dBV/m**	Grid 5 **M2** **36.95 dBV/m**	Grid 6 **M2** **36.95 dBV/m**
Grid 7 **M2** **39.05 dBV/m**	Grid 8 **M2** **39.55 dBV/m**	Grid 9 **M2** **39.53 dBV/m**

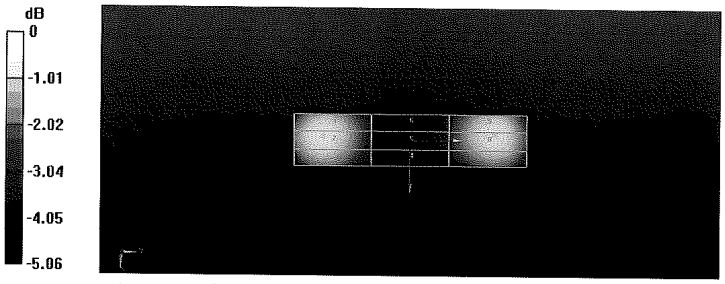

0 dB = 88.87 V/m = 38.98 dBV/m

© 2019 PCTEST Engineering Laboratory, Inc.

© 2019 PCTEST Engineering Laboratory, Inc. All rights reserved. Unless otherwise specified, no part of this report may be reproduced or utilized in any part, form or by any means, electronic or mechanical, including photocopying and microfilm, without permission in writing from PCTEST Engineering Laboratory, Inc. If you have any questions about this international copyright or have an enquiry about obtaining additional rights to this report or assembly of contents thereof, please contact INFO@PCTEST.COM.

Calibration Laboratory of
Schmid & Partner
Engineering AG
Zeughausstrasse 43, 8004 Zurich, Switzerland

S Schweizerischer Kalibrierdienst
C Service suisse d'étalonnage
S Servizio svizzero di taratura
Swiss Calibration Service

Accredited by the Swiss Accreditation Service (SAS)
The Swiss Accreditation Service is one of the signatories to the EA Multilateral Agreement for the recognition of calibration certificates

Accreditation No.: SCS 0108

Client **PC Test**

Certificate No: CD2600V3-1012_Feb19

CALIBRATION CERTIFICATE

Object	CD2600V3 - SN: 1012
Calibration procedure(s)	QA CAL-20.v7 Calibration Procedure for Validation Sources in air
Calibration date:	February 19, 2019

3/19/2019

This calibration certificate documents the traceability to national standards, which realize the physical units of measurements (SI).
The measurements and the uncertainties with confidence probability are given on the following pages and are part of the certificate.

All calibrations have been conducted in the closed laboratory facility: environment temperature (22 ± 3)°C and humidity < 70%.

Calibration Equipment used (M&TE critical for calibration)

Primary Standards	ID #	Cal Date (Certificate No.)	Scheduled Calibration
Power meter NRP	SN: 104778	04-Apr-18 (No. 217-02672/02673)	Apr-19
Power sensor NRP-Z91	SN: 103244	04-Apr-18 (No. 217-02672)	Apr-19
Power sensor NRP-Z91	SN: 103245	04-Apr-18 (No. 217-02673)	Apr-19
Reference 20 dB Attenuator	SN: 5058 (20k)	04-Apr-18 (No. 217-02682)	Apr-19
Type-N mismatch combination	SN: 5047.2 / 06327	04-Apr-18 (No. 217-02683)	Apr-19
Probe EF3DV3	SN: 4013	03-Jan-19 (No. EF3-4013_Jan19)	Jan-20
DAE4	SN: 781	09-Jan-19 (No. DAE4-781_Jan19)	Jan-20

Secondary Standards	ID #	Check Date (in house)	Scheduled Check
Power meter Agilent 4419B	SN: GB42420191	09-Oct-09 (in house check Oct-17)	In house check: Oct-20
Power sensor HP E4412A	SN: US38485102	05-Jan-10 (in house check Oct-17)	In house check: Oct-20
Power sensor HP 8482A	SN: US37295597	09-Oct-09 (in house check Oct-17)	In house check: Oct-20
RF generator R&S SMT-06	SN: 832283/011	27-Aug-12 (in house check Oct-17)	In house check: Oct-20
Network Analyzer HP 8358A	SN: US41080477	31-Mar-14 (in house check Oct-18)	In house check: Oct-19

	Name	Function	Signature
Calibrated by:	Claudio Leubler	Laboratory Technician	
Approved by:	Katja Pokovic	Technical Manager	

Issued: February 20, 2019

This calibration certificate shall not be reproduced except in full without written approval of the laboratory.

© 2019 PCTEST Engineering Laboratory, Inc. All rights reserved. Unless otherwise specified, no part of this report may be reproduced or utilized in any part, form or by any means, electronic or mechanical, including photocopying and microfilm, without permission in writing from PCTEST Engineering Laboratory, Inc. If you have any questions about this international copyright or have an enquiry about obtaining additional rights to this report or assembly of contents thereof, please contact INFO@PCTEST.COM.

References

[1] ANSI-C63.19-2011
American National Standard, Methods of Measurement of Compatibility between Wireless Communications Devices and Hearing Aids.

Methods Applied and Interpretation of Parameters:

- *Coordinate System:* y-axis is in the direction of the dipole arms. z-axis is from the basis of the antenna (mounted on the table) towards its feed point between the two dipole arms. x-axis is normal to the other axes. In coincidence with the standards [1], the measurement planes (probe sensor center) are selected to be at a distance of 15 mm above the top metal edge of the dipole arms.
- *Measurement Conditions:* Further details are available from the hardcopies at the end of the certificate. All figures stated in the certificate are valid at the frequency indicated. The forward power to the dipole connector is set with a calibrated power meter connected and monitored with an auxiliary power meter connected to a directional coupler. While the dipole under test is connected, the forward power is adjusted to the same level.
- *Antenna Positioning:* The dipole is mounted on a HAC Test Arch phantom using the matching dipole positioner with the arms horizontal and the feeding cable coming from the floor. The measurements are performed in a shielded room with absorbers around the setup to reduce the reflections.
  It is verified before the mounting of the dipole under the Test Arch phantom, that its arms are perfectly in a line. It is installed on the HAC dipole positioner with its arms parallel below the dielectric reference wire and able to move elastically in vertical direction without changing its relative position to the top center of the Test Arch phantom. The vertical distance to the probe is adjusted after dipole mounting with a DASY5 Surface Check job. Before the measurement, the distance between phantom surface and probe tip is verified. The proper measurement distance is selected by choosing the matching section of the HAC Test Arch phantom with the proper device reference point (upper surface of the dipole) and the matching grid reference point (tip of the probe) considering the probe sensor offset. The vertical distance to the probe is essential for the accuracy.
- *Feed Point Impedance and Return Loss:* These parameters are measured using a HP 8753E Vector Network Analyzer. The impedance is specified at the SMA connector of the dipole. The influence of reflections was eliminating by applying the averaging function while moving the dipole in the air, at least 70cm away from any obstacles.
- *E-field distribution:* E field is measured in the x-y-plane with an isotropic ER3D-field probe with 100 mW forward power to the antenna feed point. In accordance with [1], the scan area is 20mm wide, its length exceeds the dipole arm length (180 or 90mm). The sensor center is 15 mm (in z) above the metal top of the dipole arms. Two 3D maxima are available near the end of the dipole arms. Assuming the dipole arms are perfectly in one line, the average of these two maxima (in subgrid 2 and subgrid 8) is determined to compensate for any non-parallelity to the measurement plane as well as the sensor displacement. The E-field value stated as calibration value represents the maximum of the interpolated 3D-E-field, in the plane above the dipole surface.

The reported uncertainty of measurement is stated as the standard uncertainty of measurement multiplied by the coverage factor k=2, which for a normal distribution corresponds to a coverage probability of approximately 95%.

© 2019 PCTEST Engineering Laboratory, Inc. All rights reserved. Unless otherwise specified, no part of this report may be reproduced or utilized in any part, form or by any means, electronic or mechanical, including photocopying and microfilm, without permission in writing from PCTEST Engineering Laboratory, Inc. If you have any questions about this international copyright or have an enquiry about obtaining additional rights to this report or assembly of contents thereof, please contact INFO@PCTEST.COM.

Measurement Conditions

DASY system configuration, as far as not given on page 1.

DASY Version	DASY5	V52.10.2
Phantom	HAC Test Arch	
Distance Dipole Top - Probe Center	15 mm	
Scan resolution	dx, dy = 5 mm	
Frequency	2600 MHz ± 1 MHz	
Input power drift	< 0.05 dB	

Maximum Field values at 2600 MHz

E-field 15 mm above dipole surface	condition	**Interpolated maximum**
Maximum measured above high end	100 mW input power	85.6 V/m = 38.65 dBV/m
Maximum measured above low end	100 mW input power	84.7 V/m = 38.56 dBV/m
Averaged maximum above arm	100 mW input power	**85.2 V/m ± 12.8 % (k=2)**

Appendix (Additional assessments outside the scope of SCS 0108)

Antenna Parameters

Frequency	**Return Loss**	**Impedance**
2450 MHz	20.5 dB	42.7 Ω - 4.8 jΩ
2550 MHz	32.1 dB	48.9 Ω + 2.2 jΩ
2600 MHz	39.6 dB	50.3 Ω + 1.0 jΩ
2650 MHz	30.4 dB	53.0 Ω + 0.9 jΩ
2750 MHz	20.9 dB	48.9 Ω - 8.9 jΩ

3.2 Antenna Design and Handling

The calibration dipole has a symmetric geometry with a built-in two stub matching network, which leads to the enhanced bandwidth.
The dipole is built of standard semirigid coaxial cable. The internal matching line is open ended. The antenna is therefore open for DC signals.
Do not apply force to dipole arms, as they are liable to bend. The soldered connections near the feedpoint may be damaged. After excessive mechanical stress or overheating, check the impedance characteristics to ensure that the internal matching network is not affected.

After long term use with 40W radiated power, only a slight warming of the dipole near the feedpoint can be measured.

© 2019 PCTEST Engineering Laboratory, Inc.

© 2019 PCTEST Engineering Laboratory, Inc. All rights reserved. Unless otherwise specified, no part of this report may be reproduced or utilized in any part, form or by any means, electronic or mechanical, including photocopying and microfilm, without permission in writing from PCTEST Engineering Laboratory, Inc. If you have any questions about this international copyright or have an enquiry about obtaining additional rights to this report or assembly of contents thereof, please contact INFO@PCTEST.COM.

Impedance Measurement Plot

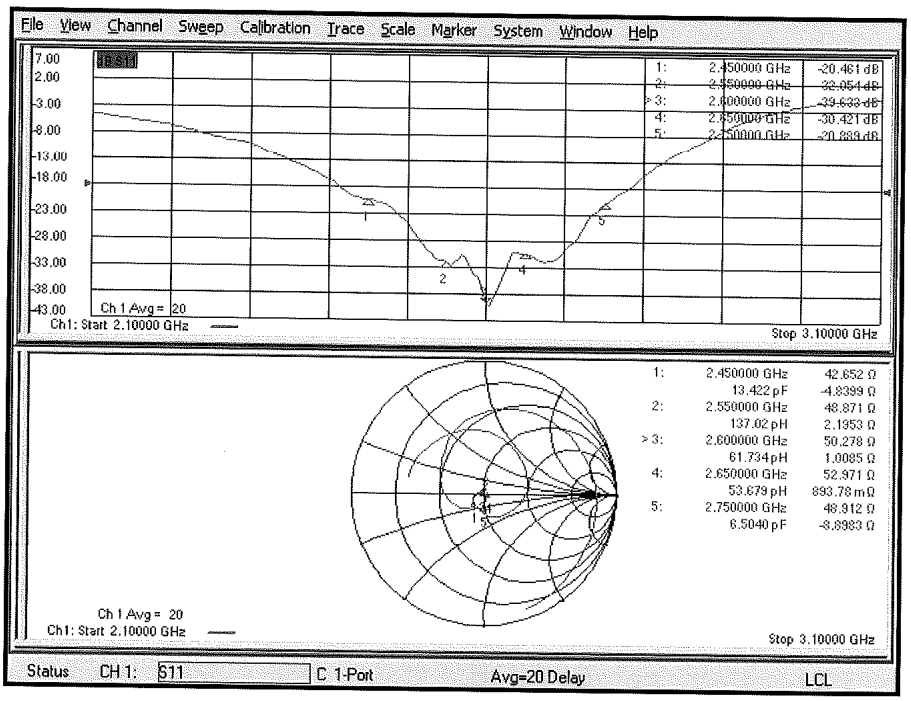

© 2019 PCTEST Engineering Laboratory, Inc.

© 2019 PCTEST Engineering Laboratory, Inc. All rights reserved. Unless otherwise specified, no part of this report may be reproduced or utilized in any part, form or by any means, electronic or mechanical, including photocopying and microfilm, without permission in writing from PCTEST Engineering Laboratory, Inc. If you have any questions about this international copyright or have an enquiry about obtaining additional rights to this report or assembly of contents thereof, please contact INFO@PCTEST.COM.

DASY5 E-field Result

Date: 19.02.2019

Test Laboratory: SPEAG Lab2

DUT: HAC Dipole 2600 MHz; Type: CD2600V3; Serial: CD2600V3 - SN: 1012

Communication System: UID 0 - CW ; Frequency: 2600 MHz
Medium parameters used: $\sigma = 0$ S/m, $\varepsilon_r = 1$; $\rho = 0$ kg/m^3
Phantom section: RF Section
Measurement Standard: DASY5 (IEEE/IEC/ANSI C63.19-2011)

DASY52 Configuration:

- Probe: EF3DV3 - SN4013; ConvF(1, 1, 1) @ 2600 MHz; Calibrated: 03.01.2019
- Sensor-Surface: (Fix Surface)
- Electronics: DAE4 Sn781; Calibrated: 09.01.2019
- Phantom: HAC Test Arch with AMCC; Type: SD HAC P01 BA; Serial: 1070
- DASY52 52.10.2(1495); SEMCAD X 14.6.12(7450)

Dipole E-Field measurement @ 2600MHz - with/E-Scan - 2600MHz d=15mm/Hearing Aid Compatibility Test (41x181x1):
Interpolated grid: dx=0.5000 mm, dy=0.5000 mm
Device Reference Point: 0, 0, -6.3 mm
Reference Value = 62.82 V/m; Power Drift = -0.01 dB
Applied MIF = 0.00 dB
RF audio interference level = 38.65 dBV/m
Emission category: M2

MIF scaled E-field

Grid 1 **M2** **38.09 dBV/m**	Grid 2 **M2** **38.56 dBV/m**	Grid 3 **M2** **38.54 dBV/m**
Grid 4 **M2** **37.82 dBV/m**	Grid 5 **M2** **38.06 dBV/m**	Grid 6 **M2** **38.02 dBV/m**
Grid 7 **M2** **38.36 dBV/m**	Grid 8 **M2** **38.65 dBV/m**	Grid 9 **M2** **38.56 dBV/m**

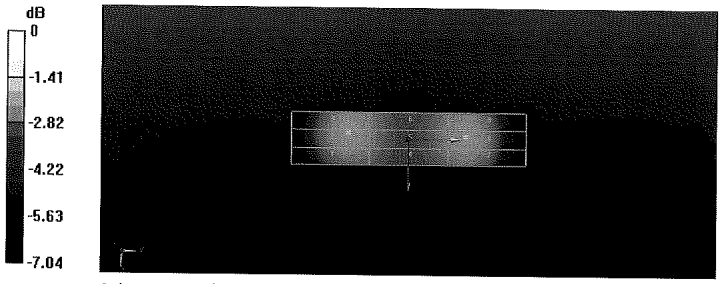

0 dB = 85.60 V/m = 38.65 dBV/m

© 2019 PCTEST Engineering Laboratory, Inc.

© 2019 PCTEST Engineering Laboratory, Inc. All rights reserved. Unless otherwise specified, no part of this report may be reproduced or utilized in any part, form or by any means, electronic or mechanical, including photocopying and microfilm, without permission in writing from PCTEST Engineering Laboratory, Inc. If you have any questions about this international copyright or have an enquiry about obtaining additional rights to this report or assembly of contents thereof, please contact INFO@PCTEST.COM.

Calibration Laboratory of
Schmid & Partner
Engineering AG
Zeughausstrasse 43, 8004 Zurich, Switzerland

S Schweizerischer Kalibrierdienst
C Service suisse d'étalonnage
Servizio svizzero di taratura
S Swiss Calibration Service

Accredited by the Swiss Accreditation Service (SAS)
The Swiss Accreditation Service is one of the signatories to the EA Multilateral Agreement for the recognition of calibration certificates

Accreditation No.: SCS 0108

Client **PC Test**

Certificate No: CD3500V3-1005_Jan19

CALIBRATION CERTIFICATE

Object	CD3500V3 - SN: 1005
Calibration procedure(s)	QA CAL-20.v7 Calibration Procedure for Validation Sources in air ✓ QA 2/11/2019
Calibration date:	January 15, 2019

This calibration certificate documents the traceability to national standards, which realize the physical units of measurements (SI).
The measurements and the uncertainties with confidence probability are given on the following pages and are part of the certificate.

All calibrations have been conducted in the closed laboratory facility: environment temperature (22 ± 3)°C and humidity < 70%.

Calibration Equipment used (M&TE critical for calibration)

Primary Standards	ID #	Cal Date (Certificate No.)	Scheduled Calibration
Power meter NRP	SN: 104778	04-Apr-18 (No. 217-02672/02673)	Apr-19
Power sensor NRP-Z91	SN: 103244	04-Apr-18 (No. 217-02672)	Apr-19
Power sensor NRP-Z91	SN: 103245	04-Apr-18 (No. 217-02673)	Apr-19
Reference 20 dB Attenuator	SN: 5058 (20k)	04-Apr-18 (No. 217-02682)	Apr-19
Type-N mismatch combination	SN: 5047.2 / 06327	04-Apr-18 (No. 217-02683)	Apr-19
Probe EF3DV3	SN: 4013	03-Jan-19 (No. EF3-4013_Jan19)	Jan-20
DAE4	SN: 781	09-Jan-19 (No. DAE4-781_Jan19)	Jan-20

Secondary Standards	ID #	Check Date (in house)	Scheduled Check
Power meter Agilent 4419B	SN: GB42420191	09-Oct-09 (in house check Oct-17)	In house check: Oct-20
Power sensor HP E4412A	SN: US38485102	05-Jan-10 (in house check Oct-17)	In house check: Oct-20
Power sensor HP 8482A	SN: US37295597	09-Oct-09 (in house check Oct-17)	In house check: Oct-20
RF generator R&S SMT-06	SN: 832283/011	27-Aug-12 (in house check Oct-17)	In house check: Oct-20
Network Analyzer HP 8358A	SN: US41080477	31-Mar-14 (in house check Oct-18)	In house check: Oct-19

	Name	Function	Signature
Calibrated by:	Leif Klysner	Laboratory Technician	
Approved by:	Katja Pokovic	Technical Manager	

Issued: January 17, 2019

This calibration certificate shall not be reproduced except in full without written approval of the laboratory.

© 2019 PCTEST Engineering Laboratory, Inc.

© 2019 PCTEST Engineering Laboratory, Inc. All rights reserved. Unless otherwise specified, no part of this report may be reproduced or utilized in any part, form or by any means, electronic or mechanical, including photocopying and microfilm, without permission in writing from PCTEST Engineering Laboratory, Inc. If you have any questions about this international copyright or have an enquiry about obtaining additional rights to this report or assembly of contents thereof, please contact INFO@PCTEST.COM.

References

[1] ANSI-C63.19-2011
American National Standard, Methods of Measurement of Compatibility between Wireless Communications Devices and Hearing Aids.

Methods Applied and Interpretation of Parameters:

- *Coordinate System:* y-axis is in the direction of the dipole arms. z-axis is from the basis of the antenna (mounted on the table) towards its feed point between the two dipole arms. x-axis is normal to the other axes. In coincidence with the standards [1], the measurement planes (probe sensor center) are selected to be at a distance of 15 mm above the top metal edge of the dipole arms.
- *Measurement Conditions:* Further details are available from the hardcopies at the end of the certificate. All figures stated in the certificate are valid at the frequency indicated. The forward power to the dipole connector is set with a calibrated power meter connected and monitored with an auxiliary power meter connected to a directional coupler. While the dipole under test is connected, the forward power is adjusted to the same level.
- *Antenna Positioning:* The dipole is mounted on a HAC Test Arch phantom using the matching dipole positioner with the arms horizontal and the feeding cable coming from the floor. The measurements are performed in a shielded room with absorbers around the setup to reduce the reflections.
  It is verified before the mounting of the dipole under the Test Arch phantom, that its arms are perfectly in a line. It is installed on the HAC dipole positioner with its arms parallel below the dielectric reference wire and able to move elastically in vertical direction without changing its relative position to the top center of the Test Arch phantom. The vertical distance to the probe is adjusted after dipole mounting with a DASY5 Surface Check job. Before the measurement, the distance between phantom surface and probe tip is verified. The proper measurement distance is selected by choosing the matching section of the HAC Test Arch phantom with the proper device reference point (upper surface of the dipole) and the matching grid reference point (tip of the probe) considering the probe sensor offset. The vertical distance to the probe is essential for the accuracy.
- *Feed Point Impedance and Return Loss:* These parameters are measured using a HP 8753E Vector Network Analyzer. The impedance is specified at the SMA connector of the dipole. The influence of reflections was eliminating by applying the averaging function while moving the dipole in the air, at least 70cm away from any obstacles.
- *E-field distribution:* E field is measured in the x-y-plane with an isotropic ER3D-field probe with 100 mW forward power to the antenna feed point. In accordance with [1], the scan area is 20mm wide, its length exceeds the dipole arm length (180 or 90mm). The sensor center is 15 mm (in z) above the metal top of the dipole arms. Two 3D maxima are available near the end of the dipole arms. Assuming the dipole arms are perfectly in one line, the average of these two maxima (in subgrid 2 and subgrid 8) is determined to compensate for any non-parallelity to the measurement plane as well as the sensor displacement. The E-field value stated as calibration value represents the maximum of the interpolated 3D-E-field, in the plane above the dipole surface.

The reported uncertainty of measurement is stated as the standard uncertainty of measurement multiplied by the coverage factor k=2, which for a normal distribution corresponds to a coverage probability of approximately 95%.

© 2019 PCTEST Engineering Laboratory, Inc. All rights reserved. Unless otherwise specified, no part of this report may be reproduced or utilized in any part, form or by any means, electronic or mechanical, including photocopying and microfilm, without permission in writing from PCTEST Engineering Laboratory, Inc. If you have any questions about this international copyright or have an enquiry about obtaining additional rights to this report or assembly of contents thereof, please contact INFO@PCTEST.COM.

Measurement Conditions

DASY system configuration, as far as not given on page 1.

DASY Version	DASY5	V52.10.2
Phantom	HAC Test Arch	
Distance Dipole Top - Probe Center	15 mm	
Scan resolution	dx, dy = 5 mm	
Frequency	3500 MHz ± 1 MHz	
Input power drift	< 0.05 dB	

Maximum Field values at 3500 MHz

E-field 15 mm above dipole surface	condition	**Interpolated maximum**
Maximum measured above high end	100 mW input power	85.1 V/m = 38.60 dBV/m
Maximum measured above low end	100 mW input power	83.1 V/m = 38.39 dBV/m
Averaged maximum above arm	100 mW input power	**84.1 V/m ± 12.8 % (k=2)**

Appendix (Additional assessments outside the scope of SCS 0108)

Antenna Parameters

Frequency	**Return Loss**	**Impedance**
3300 MHz	22.2 dB	58.1 Ω + 2.1 jΩ
3400 MHz	29.7 dB	53.4 Ω - 0.3 jΩ
3500 MHz	25.4 dB	55.2 Ω - 2.4 jΩ
3600 MHz	22.1 dB	49.6 Ω - 7.8 jΩ
3700 MHz	19.7 dB	41.3 Ω - 3.6 jΩ

3.2 Antenna Design and Handling

The calibration dipole has a symmetric geometry with a built-in two stub matching network, which leads to the enhanced bandwidth.
The dipole is built of standard semirigid coaxial cable. The internal matching line is open ended. The antenna is therefore open for DC signals.
Do not apply force to dipole arms, as they are liable to bend. The soldered connections near the feedpoint may be damaged. After excessive mechanical stress or overheating, check the impedance characteristics to ensure that the internal matching network is not affected.

After long term use with 40W radiated power, only a slight warming of the dipole near the feedpoint can be measured.

© 2019 PCTEST Engineering Laboratory, Inc.

© 2019 PCTEST Engineering Laboratory, Inc. All rights reserved. Unless otherwise specified, no part of this report may be reproduced or utilized in any part, form or by any means, electronic or mechanical, including photocopying and microfilm, without permission in writing from PCTEST Engineering Laboratory, Inc. If you have any questions about this international copyright or have an enquiry about obtaining additional rights to this report or assembly of contents thereof, please contact INFO@PCTEST.COM.

Impedance Measurement Plot

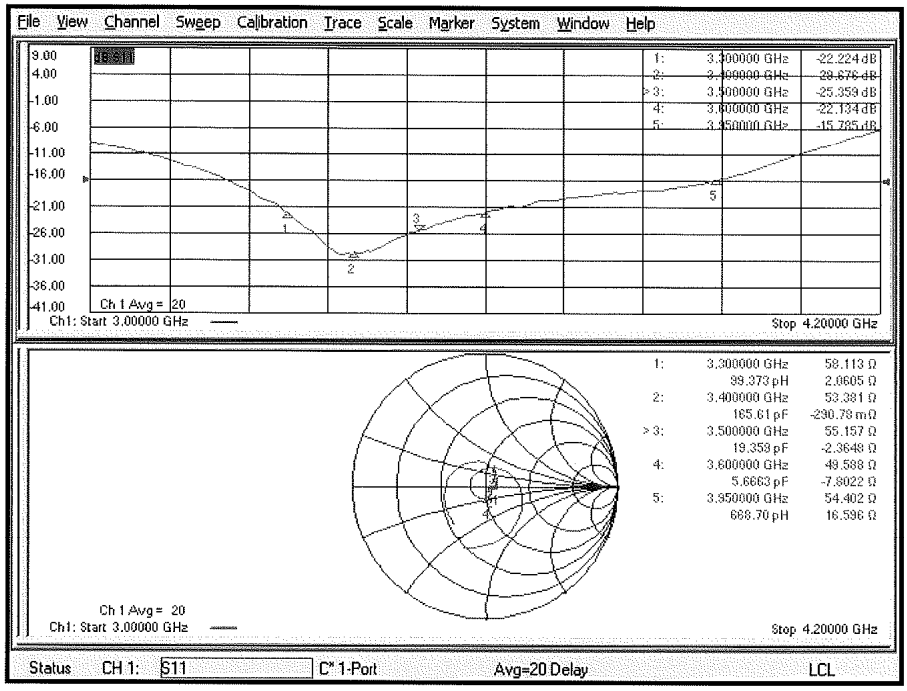

© 2019 PCTEST Engineering Laboratory, Inc.

© 2019 PCTEST Engineering Laboratory, Inc. All rights reserved. Unless otherwise specified, no part of this report may be reproduced or utilized in any part, form or by any means, electronic or mechanical, including photocopying and microfilm, without permission in writing from PCTEST Engineering Laboratory, Inc. If you have any questions about this international copyright or have an enquiry about obtaining additional rights to this report or assembly of contents thereof, please contact INFO@PCTEST.COM.

DASY5 E-field Result

Date: 15.01.2019

Test Laboratory: SPEAG Lab2

DUT: HAC Dipole 3500 MHz; Type: CD3500V3; Serial: CD3500V3 - SN: 1005

Communication System: UID 0 - CW ; Frequency: 3500 MHz
Medium parameters used: $\sigma = 0$ S/m, $\varepsilon_r = 1$; $\rho = 0$ kg/m^3
Phantom section: RF Section
Measurement Standard: DASY5 (IEEE/IEC/ANSI C63.19-2011)

DASY52 Configuration:

- Probe: EF3DV3 - SN4013; ConvF(1, 1, 1) @ 3500 MHz; Calibrated: 03.01.2019
- Sensor-Surface: (Fix Surface)
- Electronics: DAE4 Sn781; Calibrated: 09.01.2019
- Phantom: HAC Test Arch with AMCC; Type: SD HAC P01 BA; Serial: 1070
- DASY52 52.10.2(1495); SEMCAD X 14.6.12(7450)

Dipole E-Field measurement @ 3500MHz/E-Scan - 3500MHz d=15mm/Hearing Aid Compatibility Test (41x181x1):
Interpolated grid: dx=0.5000 mm, dy=0.5000 mm
Device Reference Point: 0, 0, -6.3 mm
Reference Value = 34.54 V/m; Power Drift = 0.02 dB
Applied MIF = 0.00 dB
RF audio interference level = 38.60 dBV/m
Emission category: M2

MIF scaled E-field

Grid 1 **M2** **38.08 dBV/m**	Grid 2 **M2** **38.39 dBV/m**	Grid 3 **M2** **38.38 dBV/m**
Grid 4 **M2** **38.36 dBV/m**	Grid 5 **M2** **38.6 dBV/m**	Grid 6 **M2** **38.55 dBV/m**
Grid 7 **M2** **38.35 dBV/m**	Grid 8 **M2** **38.60 dBV/m**	Grid 9 **M2** **38.54 dBV/m**

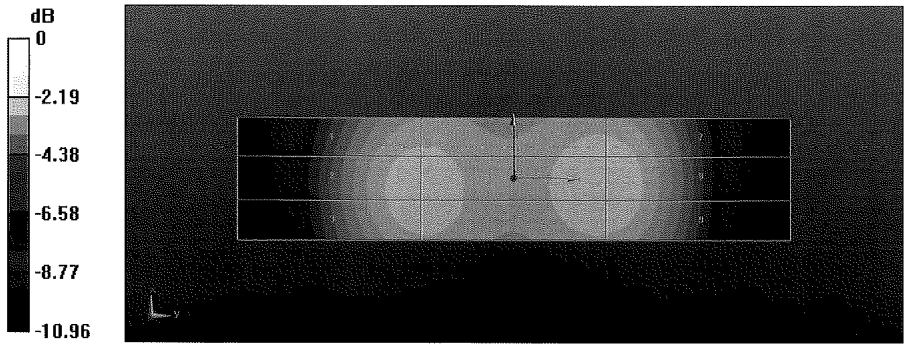

0 dB = 85.13 V/m = 38.60 dBV/m

© 2019 PCTEST Engineering Laboratory, Inc.

© 2019 PCTEST Engineering Laboratory, Inc. All rights reserved. Unless otherwise specified, no part of this report may be reproduced or utilized in any part, form or by any means, electronic or mechanical, including photocopying and microfilm, without permission in writing from PCTEST Engineering Laboratory, Inc. If you have any questions about this international copyright or have an enquiry about obtaining additional rights to this report or assembly of contents thereof, please contact INFO@PCTEST.COM.

16. CONCLUSION

The measurements indicate that the wireless communications device complies with the HAC limits specified in accordance with the ANSI C63.19 Standard and FCC WT Docket No. 01-309 RM-8658. Precise laboratory measures were taken to assure repeatability of the tests. The tested device complies with the requirements in respect to all parameters specific to the test. The test results and statements relate only to the item(s) tested.

Please note that the M-rating for this equipment only represents the field interference possible against a hypothetical and typical hearing aid. The measurement system and techniques presented in this evaluation are proposed in the ANSI standard as a means of best approximating wireless device compatibility with a hearing-aid. The literature is under continual re-construction.

© 2019 PCTEST Engineering Laboratory, Inc. All rights reserved. Unless otherwise specified, no part of this report may be reproduced or utilized in any part, form or by any means, electronic or mechanical, including photocopying and microfilm, without permission in writing from PCTEST Engineering Laboratory, Inc. If you have any questions about this international copyright or have an enquiry about obtaining additional rights to this report or assembly of contents thereof, please contact INFO@PCTEST.COM.

17. REFERENCES

1. ANSI/IEEE C63.19-2011, “American National Standard for Methods of Measurement of Compatibility between Wireless Communication Devices and Hearing Aids.”, New York, NY, IEEE, May 2011

2. FCC Office of Engineering and Technology KDB, “285076 D01 HAC Guidance v05,” September 13, 2017

3. FCC Office of Engineering and Technology KDB, “285076 D02 T-Coil Testing for CMRS IP v03,” September 13, 2017

4. FCC Public Notice DA 06-1215, *Wireless Telecommunications Bureau and Office of Engineering and Technology Clarify Use of Revised Wireless Phone Hearing Aid Compatibility Standard*, June 6, 2006

5. FCC 3G Review Guidance, Laboratory Division OET FCC, May/June 2006

6. Berger, H. S., “Compatibility Between Hearing Aids and Wireless Devices,” Electronic Industries Forum, Boston, MA, May, 1997

7. Berger, H. S., “Hearing Aid and Cellular Phone Compatibility: Working Toward Solutions,” Wireless Telephones and Hearing Aids: New Challenges for Audiology, Gallaudet University, Washington, D.C., May, 1997 (To be reprinted in the American Journal of Audiology).

8. Berger, H. S., “Hearing Aid Compatibility with Wireless Communications Devices, “ IEEE International Symposium on Electromagnetic Compatibility, Austin, TX, August, 1997.

9. Bronaugh, E. L., “Simplifying EMI Immunity (Susceptibility) Tests in TEM Cells,” in the 1990 IEEE International Symposium on Electromagnetic Compatibility Symposium Record, Washington, D.C., August 1990, pp. 488-491

10. Byme, D. and Dillon, H., The National Acoustics Laboratory (NAL) New Procedure for Selecting the Gain and Frequency Response of a Hearing Aid, Ear and Hearing 7:257-265, 1986.

11. Crawford, M. L., “Measurement of Electromagnetic Radiation from Electronic Equipment using TEM Transmission Cells, “ U.S. Department of Commerce, National Bureau of Standards, NBSIR 73-306, Feb. 1973.

12. Crawford, M. L., and Workman, J. L., “Using a TEM Cell for EMC Measurements of Electronic Equipment,” U.S. Department of Commerce, National Bureau of Standards. Technical Note 1013, July 1981.

13. Decker, W. F., Crawford, M. L., and Wilson, W. A., “Construction of a Large Transverse Electromagnetic Cell”, U.S. Department of Commerce, National Bureau of Standards, Technical Note 1011, Feb. 1979.

14. EHIMA GSM Project, Development phase, Project Report (1st part) Revision A. Technical-Audiological Laboratory and Telecom Denmark, October 1993.

© 2019 PCTEST Engineering Laboratory, Inc. All rights reserved. Unless otherwise specified, no part of this report may be reproduced or utilized in any part, form or by any means, electronic or mechanical, including photocopying and microfilm, without permission in writing from PCTEST Engineering Laboratory, Inc. If you have any questions about this international copyright or have an enquiry about obtaining additional rights to this report or assembly of contents thereof, please contact INFO@PCTEST.COM.

15. EHIMA GSM Project, Development phase, Part II Project Report. Technical-Audiological Laboratory and Telecom Denmark, June 1994.

16. EHIMA GSM Project Final Report, Hearing Aids and GSM Mobile Telephones: Interference Problems, Methods of Measurement and Levels of Immunity. Technical-Audiological Laboratory and Telecom Denmark, 1995.

17. HAMPIS Report, Comparison of Mobile phone electromagnetic near field with an upscaled electromagnetic far field, using hearing aid as reference, 21 October 1999.

18. Hearing Aids/GSM, Report from OTWIDAM, Technical-Audiological Laboratory and Telecom Denmark, April 1993.

19. IEEE 100, The Authoritative Dictionary of IEEE Standards Terms, Seventh Edition.

20. Joyner, K. H, et. al., Interference to Hearing Aids by the New Digital Mobile Telephone System, Global System for Mobile (GSM) Communication Standard, National Acoustic Laboratory, Australian Hearing Series, Sydney 1993.

21. Joyner, K. H., et. al., Interference to Hearing Aids by the Digital Mobile Telephone System, Global System for Mobile Communications (GSM), NAL Report #131, National Acoustic Laboratory, Australian Hearing Series, Sydney, 1995.

22. Konigstein, D., and Hansen, D., “A New Family of TEM Cells with enlarged bandwidth and Optimized working Volume,” in the Proceedings of the 7th International Symposium on EMC, Zurich, Switzerland, March 1987; 50:9, pp. 127-132.

23. Kuk, F., and Hjorstgaard, N. K., “Factors affecting interference from digital cellular telephones,” Hearing Journal, 1997; 50:9, pp 32-34.

24. Ma, M. A., and Kanda, M., ”Electromagnetic Compatibility and Interference Metrology,” U.S. Department of Commerce, National Bureau of Standards, Technical Note 1099, July 1986, pp. 17-43.

25. Ma, M. A., Sreenivashiah, I. , and Chang, D. C., “A Method of Determining the Emission and Susceptibility Levels of Electrically Small Objects Using a TEM Cell,” U.S. Department of Commerce, National Bureau of Standards, Technial Note 1040, July 1981.

26. McCandless, G. A., and Lyregaard, P. E., Prescription of Gain/Output (POGO) for Hearing Aids, Hearing Instruments 1:16-21, 1983

27. Skopec, M., “Hearing Aid Electromagnetic Interference from Digital Wireless Telephones, “IEEE Transactions on Rehabilitation Engineering, vol. 6, no. 2, pp. 235-239, June 1998.

28. Technical Report, GSM 05.90, GSM EMC Considerations, European Telecommunications Standards Institute, January 1993.

29. Victorian, T. A., “Digital Cellular Telephone Interference and Hearing Aid Compatibility—an Update,” Hearing Journal 1998; 51:10, pp. 53-60

30. Wong, G. S. K., and Embleton, T. F. W., eds., AIP Handbook of Condenser Microphones: Theory, Calibration and Measurements, AIP Press.

© 2019 PCTEST Engineering Laboratory, Inc. All rights reserved. Unless otherwise specified, no part of this report may be reproduced or utilized in any part, form or by any means, electronic or mechanical, including photocopying and microfilm, without permission in writing from PCTEST Engineering Laboratory, Inc. If you have any questions about this international copyright or have an enquiry about obtaining additional rights to this report or assembly of contents thereof, please contact INFO@PCTEST.COM.