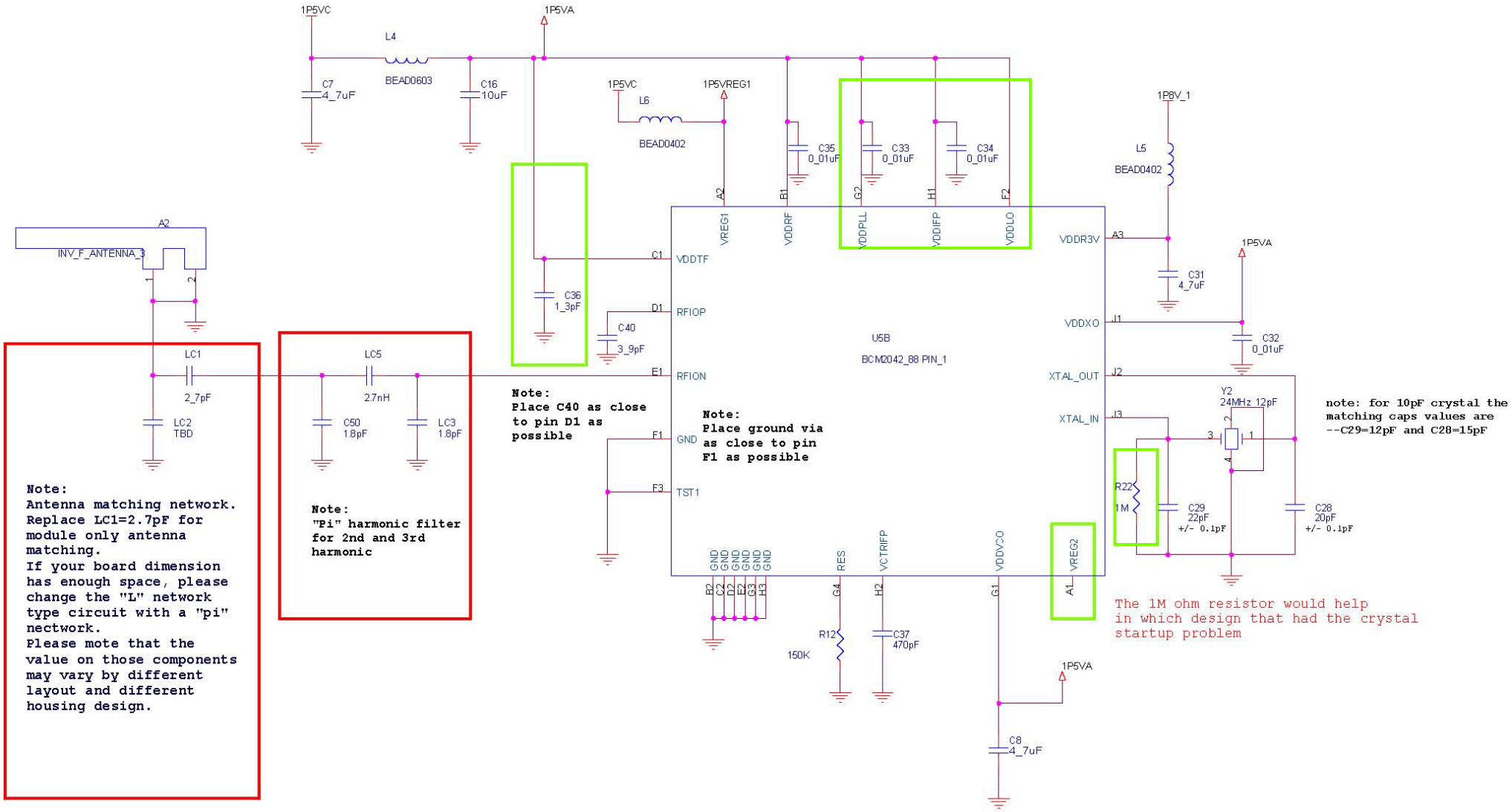
1P5VC
L4
BEAD0603
C7
4_7uF
C16
10uF
1P5VA
1P5VC
L6
BEAD0402
1P5VREG1
C35
0_01uF
C33
0_01uF
C34
0_01uF
1P8V_1
L5
BEAD0402
A2
INV_F_ANTENNA_3
C36
1_3pF
C40
3_9pF
LC1
2_7pF
LC2
TBD
LC5
2.7nH
C50
1.8pF
LC3
1.8pF
VREG1
VDDRF
VDDPLL
VDDIFP
VDDLO
VDDTF
RFIOP
RFION
GND
TST1
U5B
BCM2042_88 PIN_1
VDDR3V
VDDXO
XTAL_OUT
XTAL_IN
C31
4_7uF
1P5VA
C32
0_01uF
Y2
24MHz 12pF
R22
1M
C29
22pF
+/- 0.1pF
C28
20pF
+/- 0.1pF
RES
VCTRIFP
VDDVCO
VREG2
R12
150K
C37
470pF
1P5VA
C8
4_7uF
Note:
Place C40 as close to pin D1 as possible
Note:
Place ground via as close to pin F1 as possible
note: for 10pF crystal the matching caps values are --C29=12pF and C28=15pF
Note:
Antenna matching network.
Replace LC1=2.7pF for module only antenna matching.
If your board dimension has enough space, please change the "L" network type circuit with a "pi" nectwork.
Please mote that the value on those components may vary by different layout and different housing design.
Note:
"Pi" harmonic filter for 2nd and 3rd harmonic
The 1M ohm resistor would help in which design that had the crystal startup problem

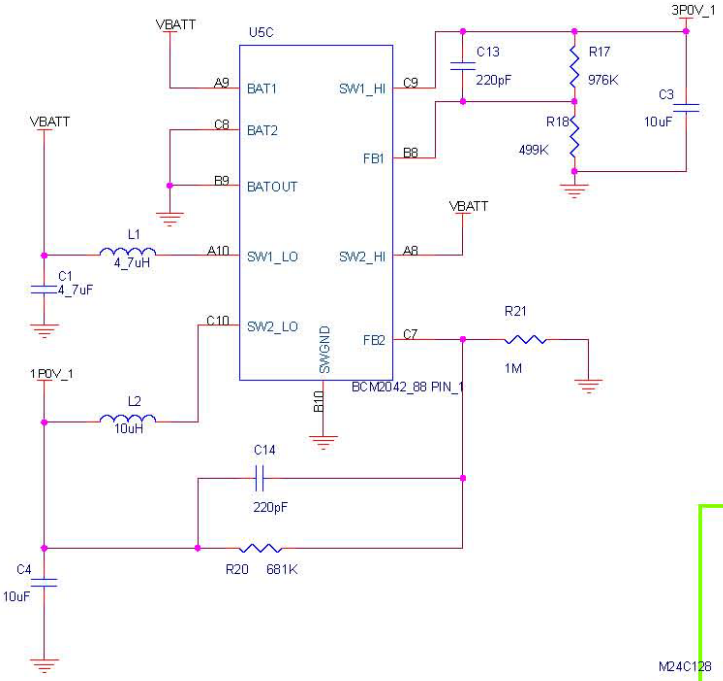

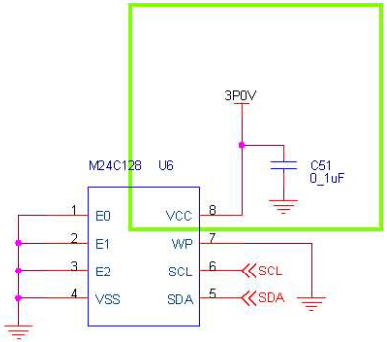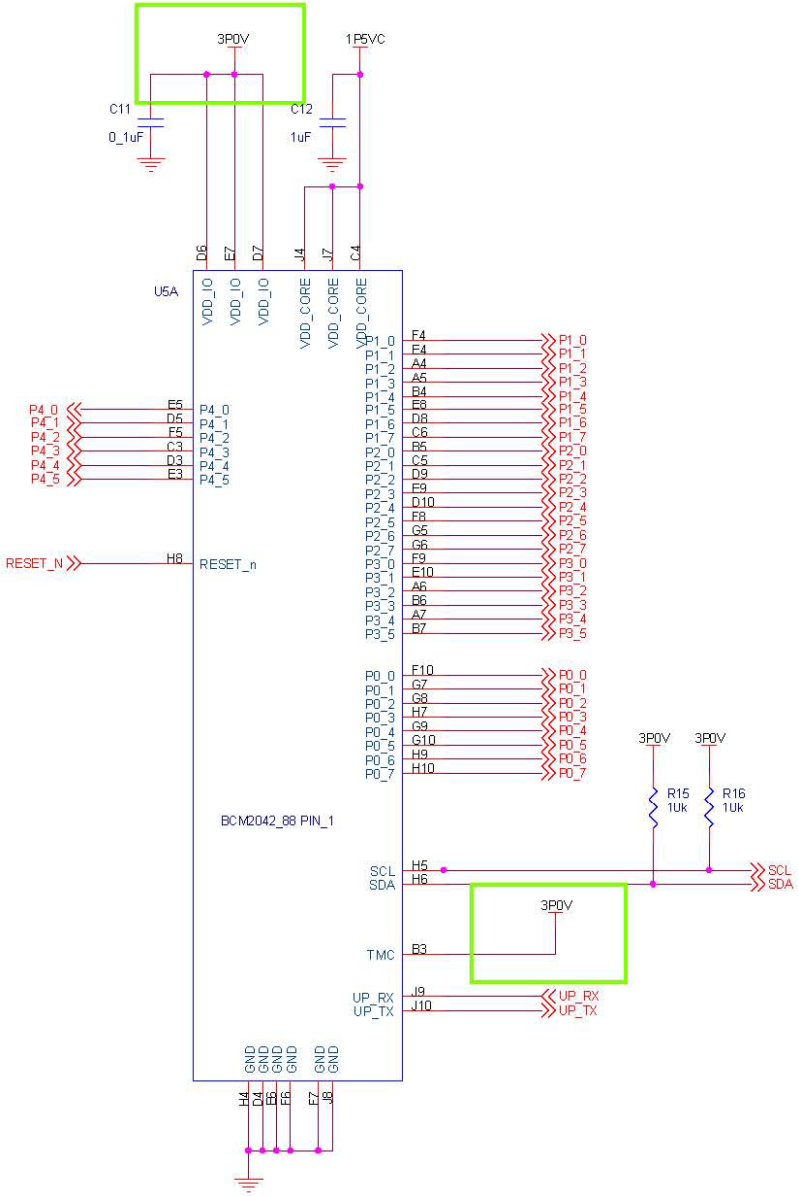
Note: The switching regulator is configured for 2 battery cells in serial.