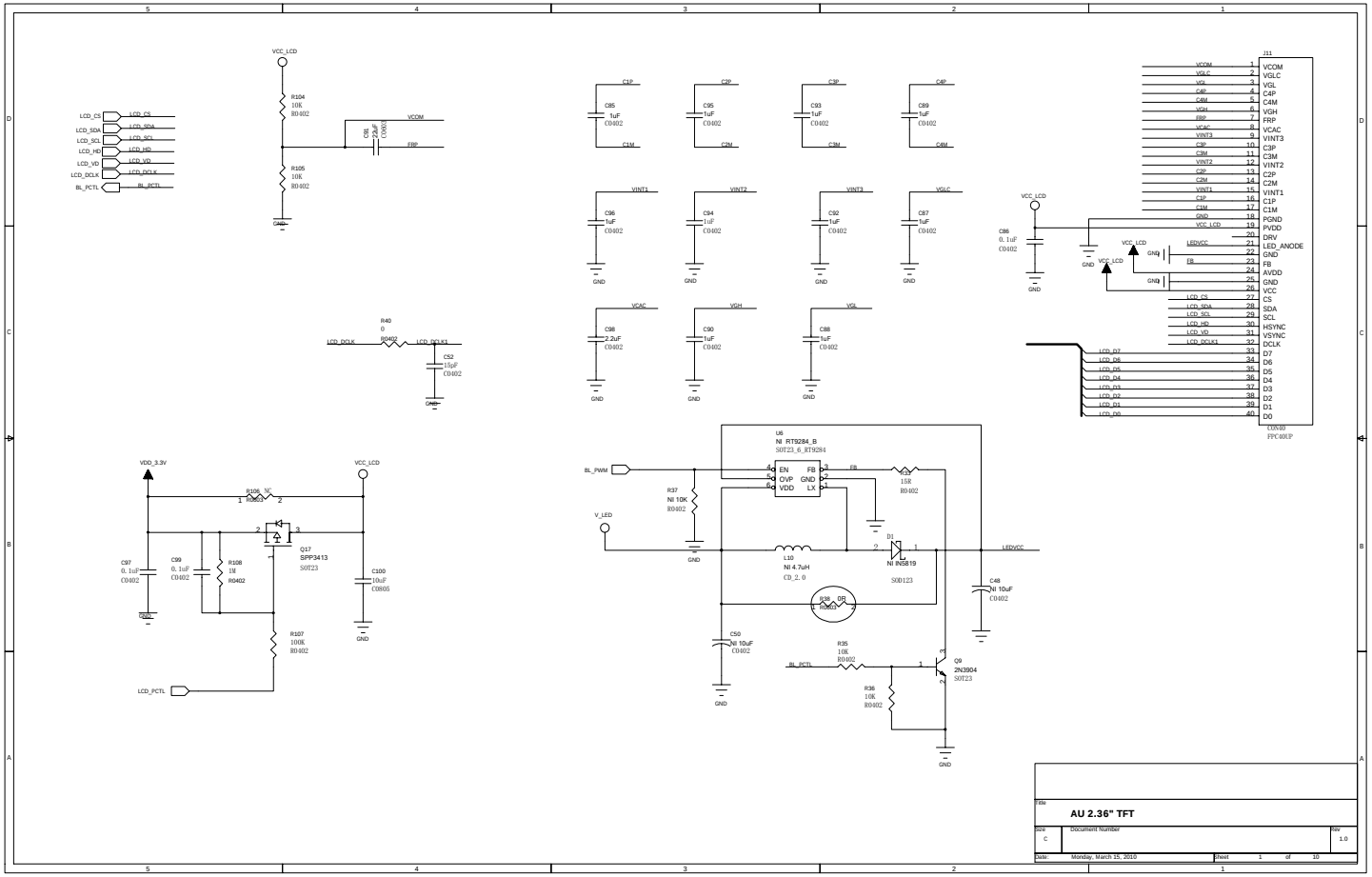

Title	AU 2.36" TFT		
Size C	Document Number		Rev 1.0
Date: Monday, March 15, 2010		Sheet 1 of 10	

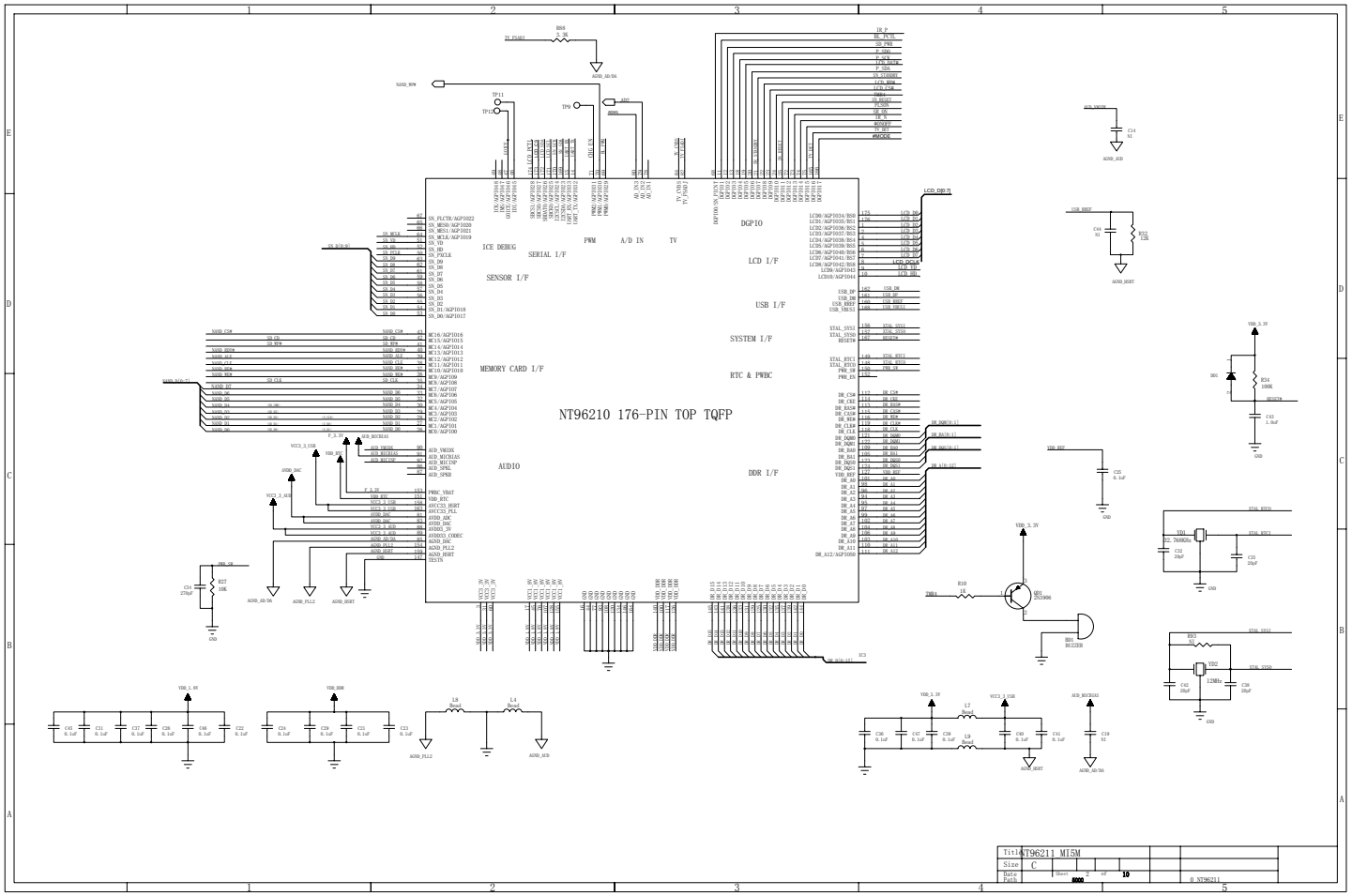
NT96210 176-PIN TOP TQFP
ICE DEBUG
SERIAL I/F
SENSOR I/F
MEMORY CARD I/F
AUDIO
PWM
A/D IN
TV
DGPIO
LCD I/F
USB I/F
SYSTEM I/F
RTC & PWBC
DDR I/F
Title NT96211 M15M
Size C
Date
Path
Sheet 9 of 10
0_NT96211

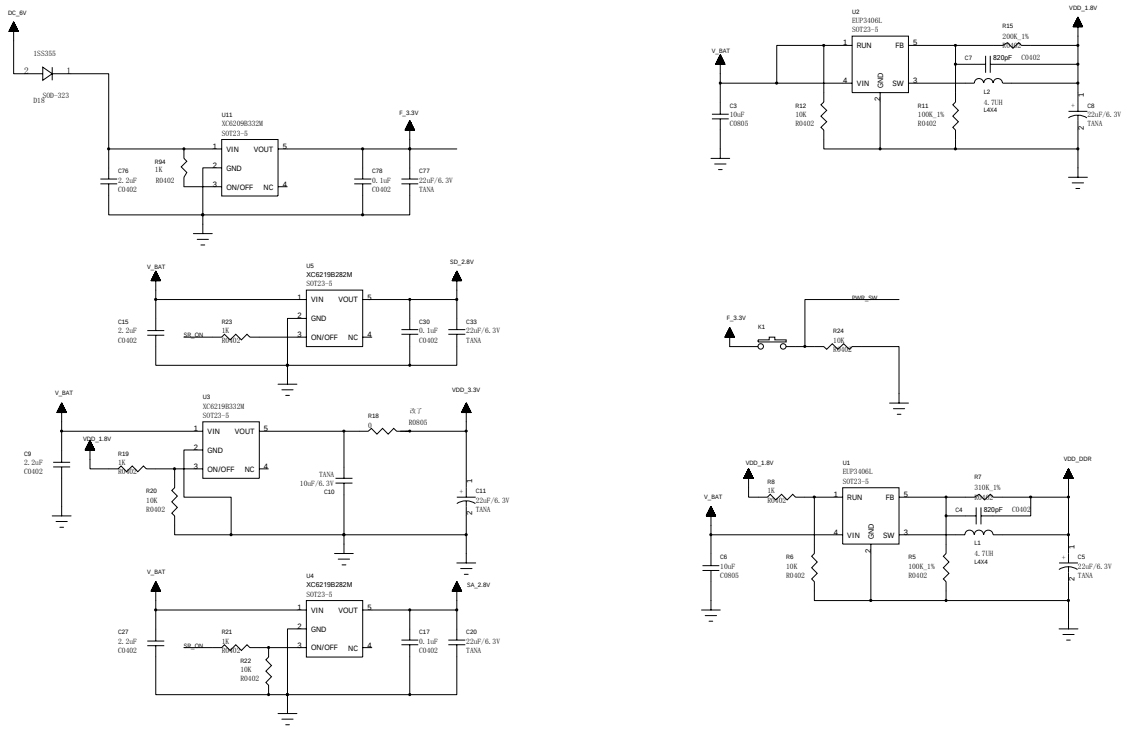

Title	Power		
Size C	Document Number KSKJ Project		Rev A
Date: Monday, March 15, 2010		Sheet 3 of 10	

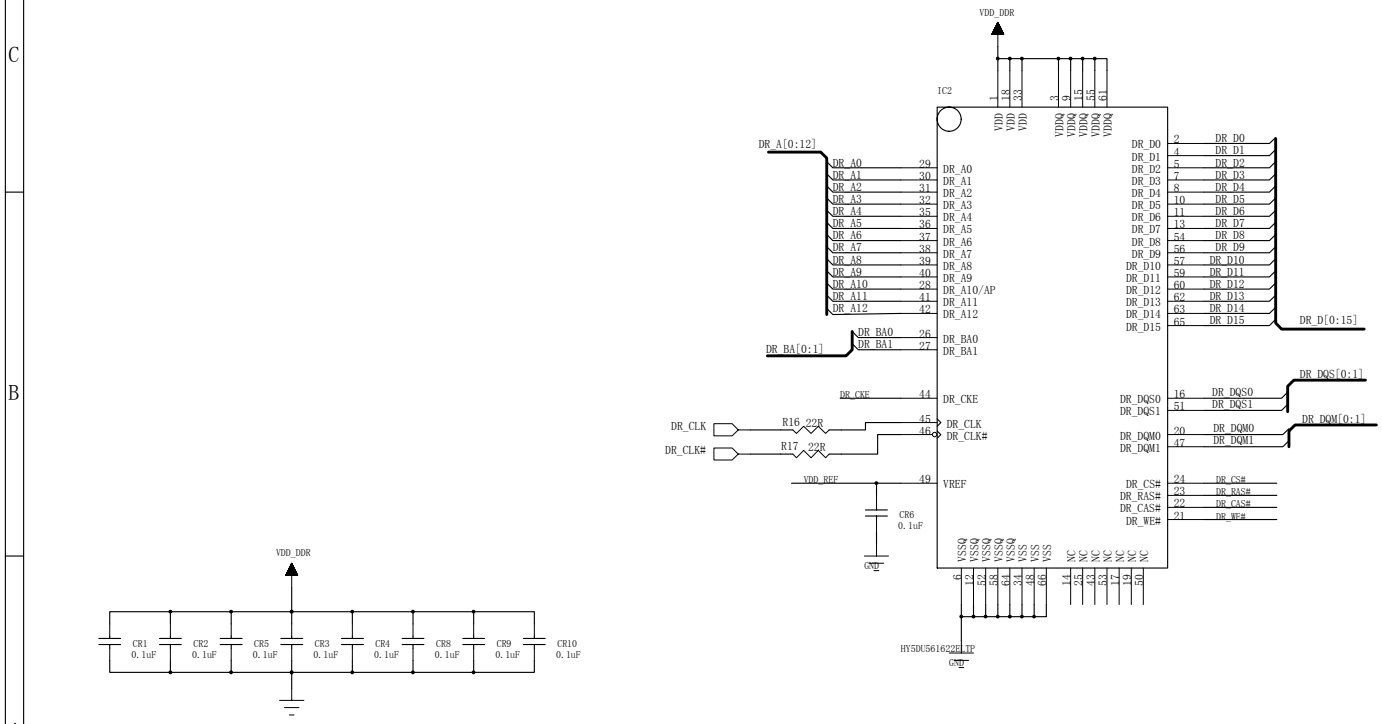

Title	NT96211 MI5M			
Size	C	1.0		
Date		Sheet 4 of 10		
Path	5000		File	2_SDRAM

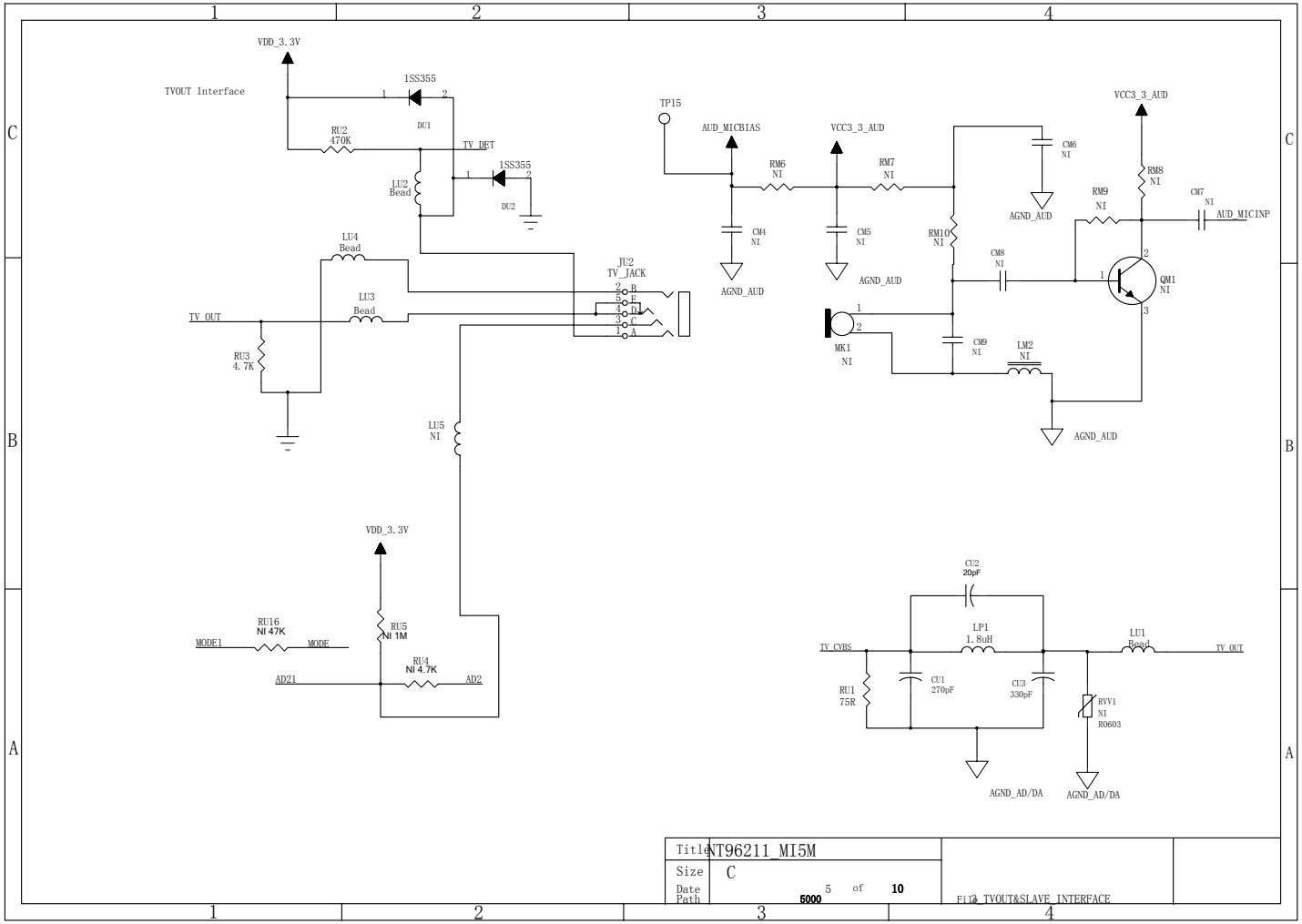

Title	NT96211_MI5M
Size	C
Date	
Path	
File	TVOUT&SLAVE_INTERFACE

5000

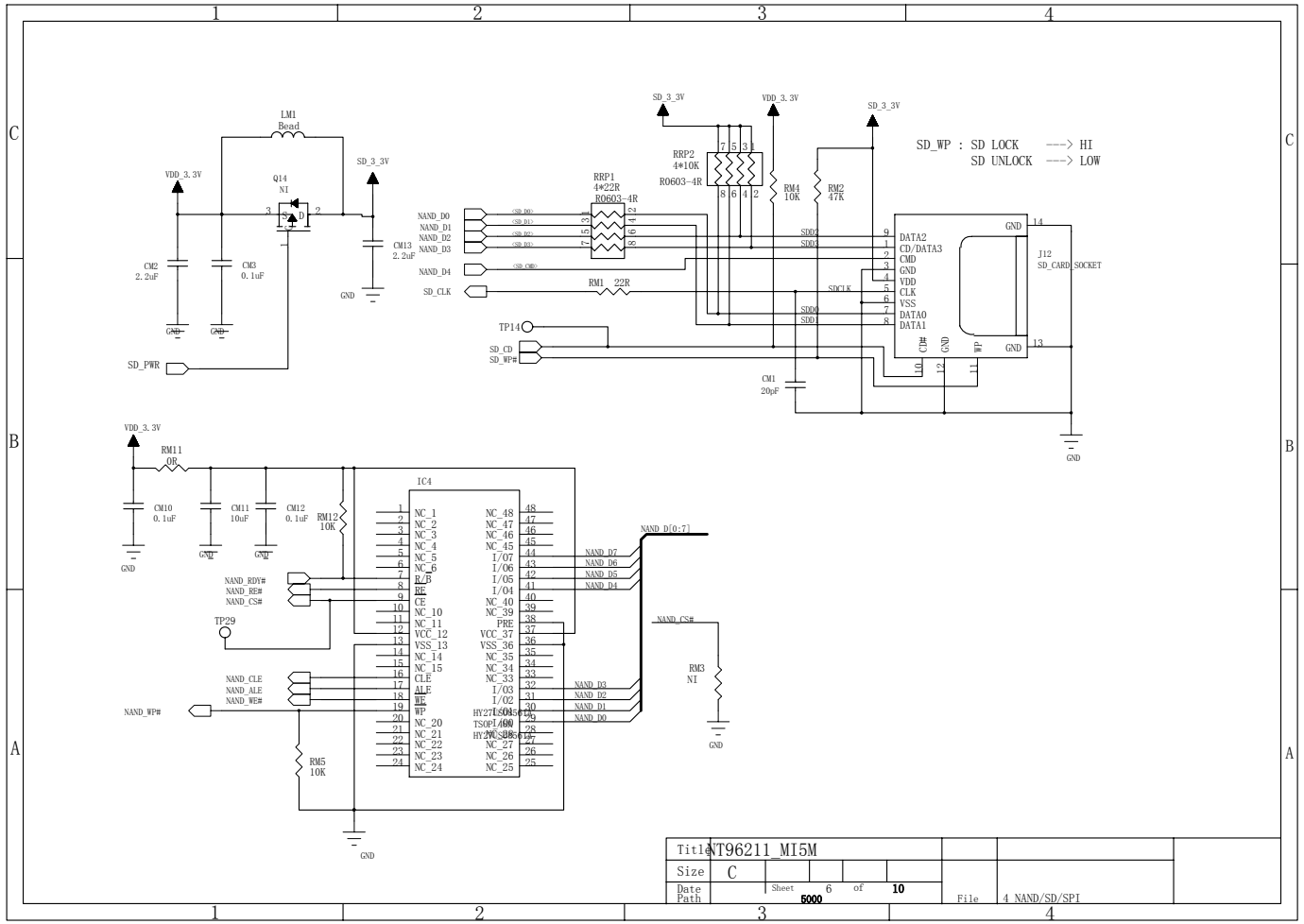
LM1
Bead
VDD_3.3V
Q14
NI
SD_3_3V
CM2
2.2uF
CM3
0.1uF
CM13
2.2uF
GND
SD_PWR
NAND_D0
NAND_D1
NAND_D2
NAND_D3
NAND_D4
SD_CLK
RRP1
4*22R
R0603-4R
RRP2
4*10K
R0603-4R
RM4
10K
RM2
47K
RM1 22R
SD_WP : SD LOCK ---> HI
SD UNLOCK ---> LOW
DATA2
CD/DATA3
CMD
GND
VDD
CLK
VSS
DATA0
DATA1
J12
SD_CARD_SOCKET
SDCLK
SDD2
SDD3
SDD0
SDD1
TP14
SD_CD
SD_WP#
CM1
20uF
RM11
0R
CM10
0.1uF
CM11
10uF
CM12
0.1uF
RM12
10K
IC4
NAND_RDY#
NAND_RE#
NAND_CS#
TP29
NAND_CLE
NAND_ALE
NAND_WE#
NAND_WP#
RM5
10K
NAND_D[0:7]
NAND_D7
NAND_D6
NAND_D5
NAND_D4
NAND_D3
NAND_D2
NAND_D1
NAND_D0
NAND_CS#
RM3
NI
Title NT96211_MI5M
Size C
Date
Path
Sheet 6 of 10
5000
File 4 NAND/SD/SPI

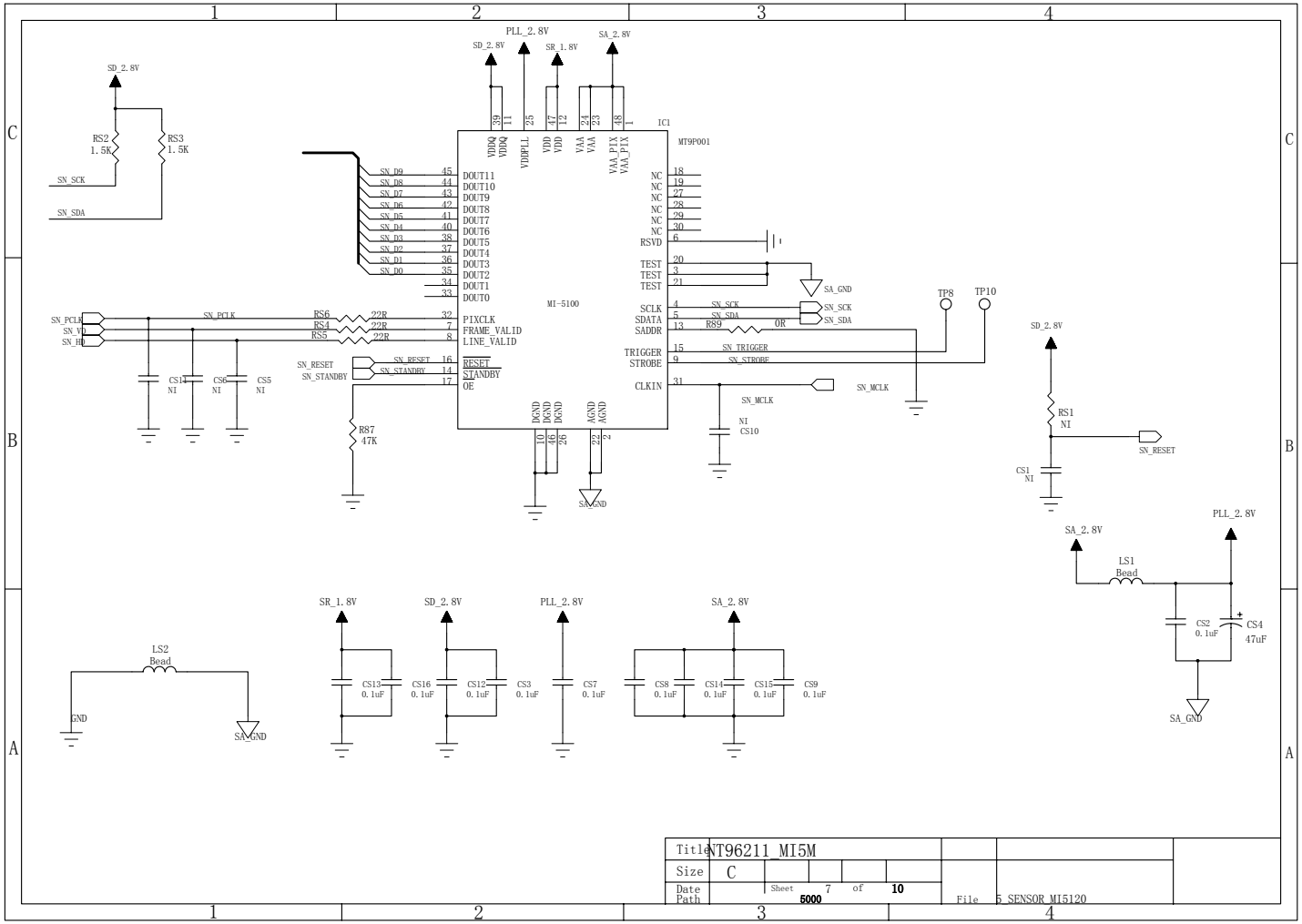

Title	NT96211 MI5M		
Size	C		
Date		Sheet 7 of 10	File 5 SENSOR MI5120
Path	5000		

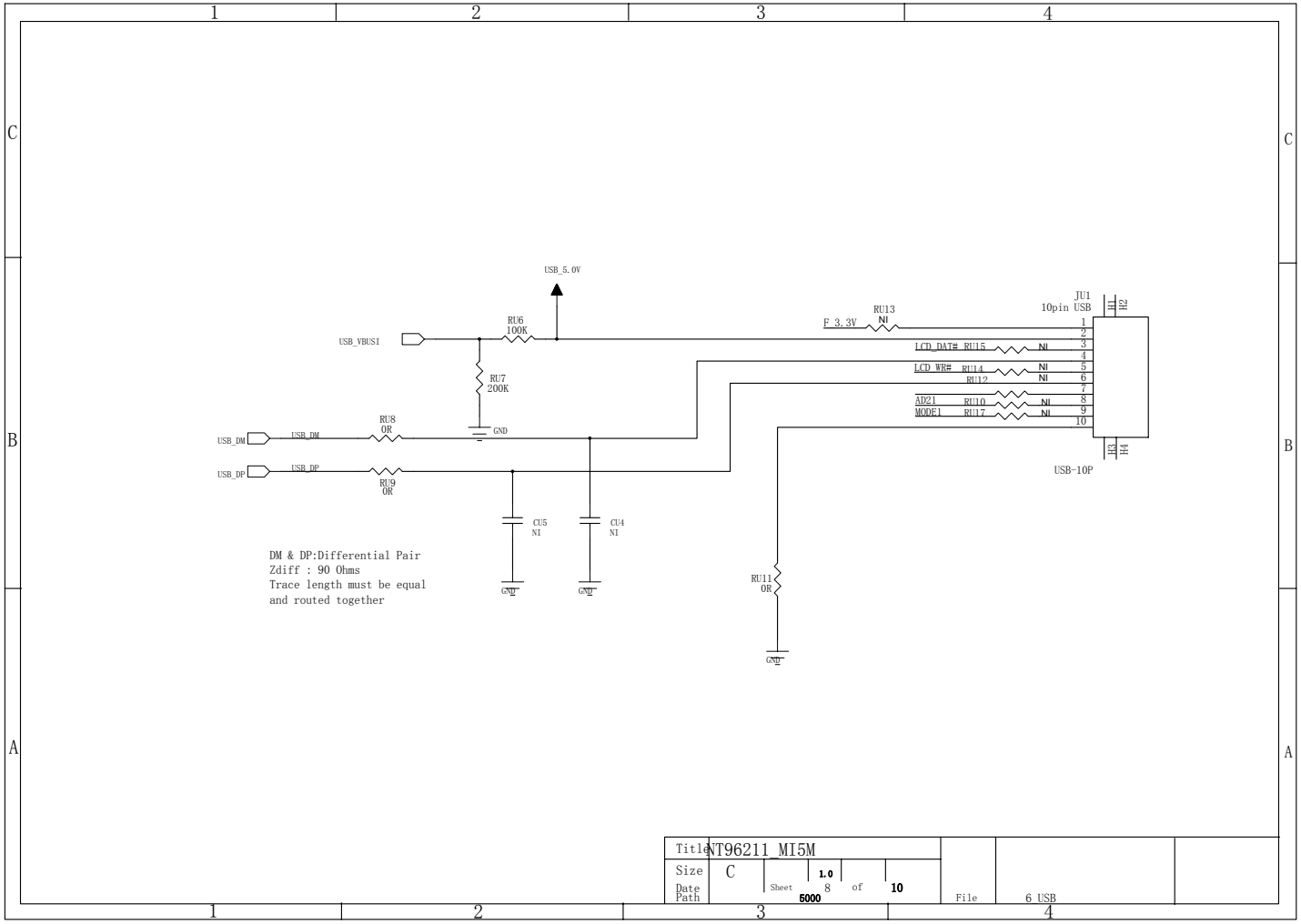

Title	NT96211 MI5M				
Size	C	1.0		File	6 USB
Date		Sheet 8 of 10			
Path		5000			

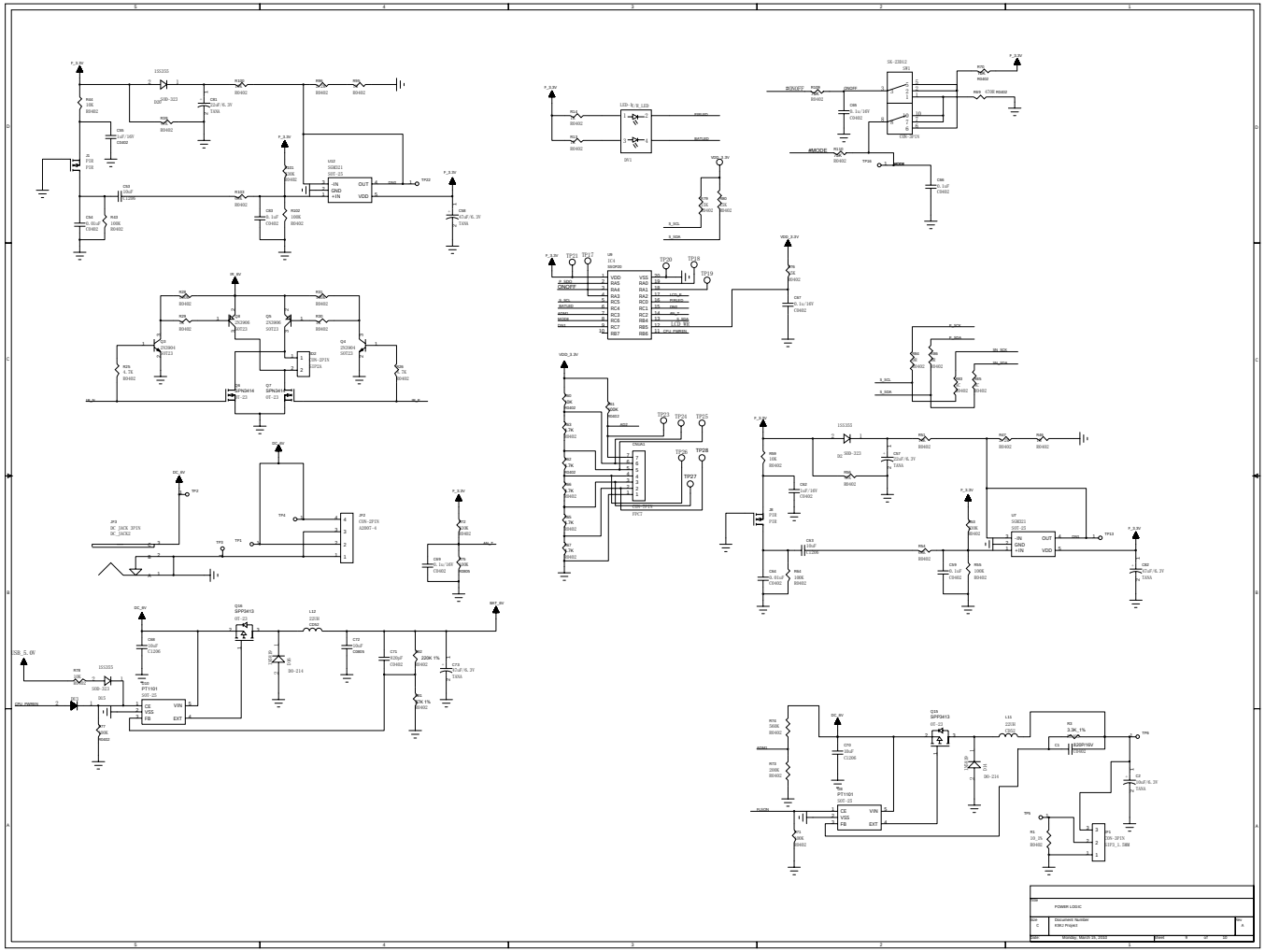
POWER LOGIC
Document Number
ESK2 Project
Monday, March 25, 2024
Rev
C
Sheet 5 of 10

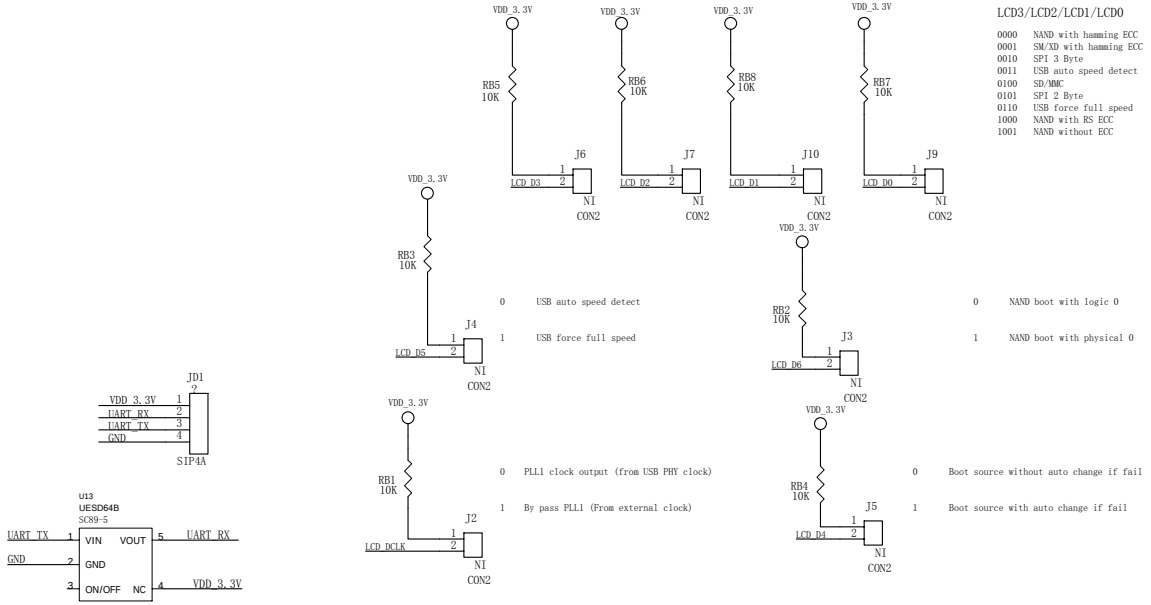

Title	NT96211 MI5M		
Size	C	Sheet 10 of 10	File A_BOOT&DEBUG
Date			
Path		5000	