ISSUE	REVISION	DATE:	MADE BY	APPROVED BY
1.0	FIRST RELEASE FOR PRODUCTION	15 Apr 11	GZHOU	ZQWU
2.0	REPLACE 12Bit FOR PRODUCTION	24 Nov 11	GZHOU	ZQWU
3.0	ADD REGULATOR FOR 12Bit	4 Jan 12	GZHOU	ZQWU

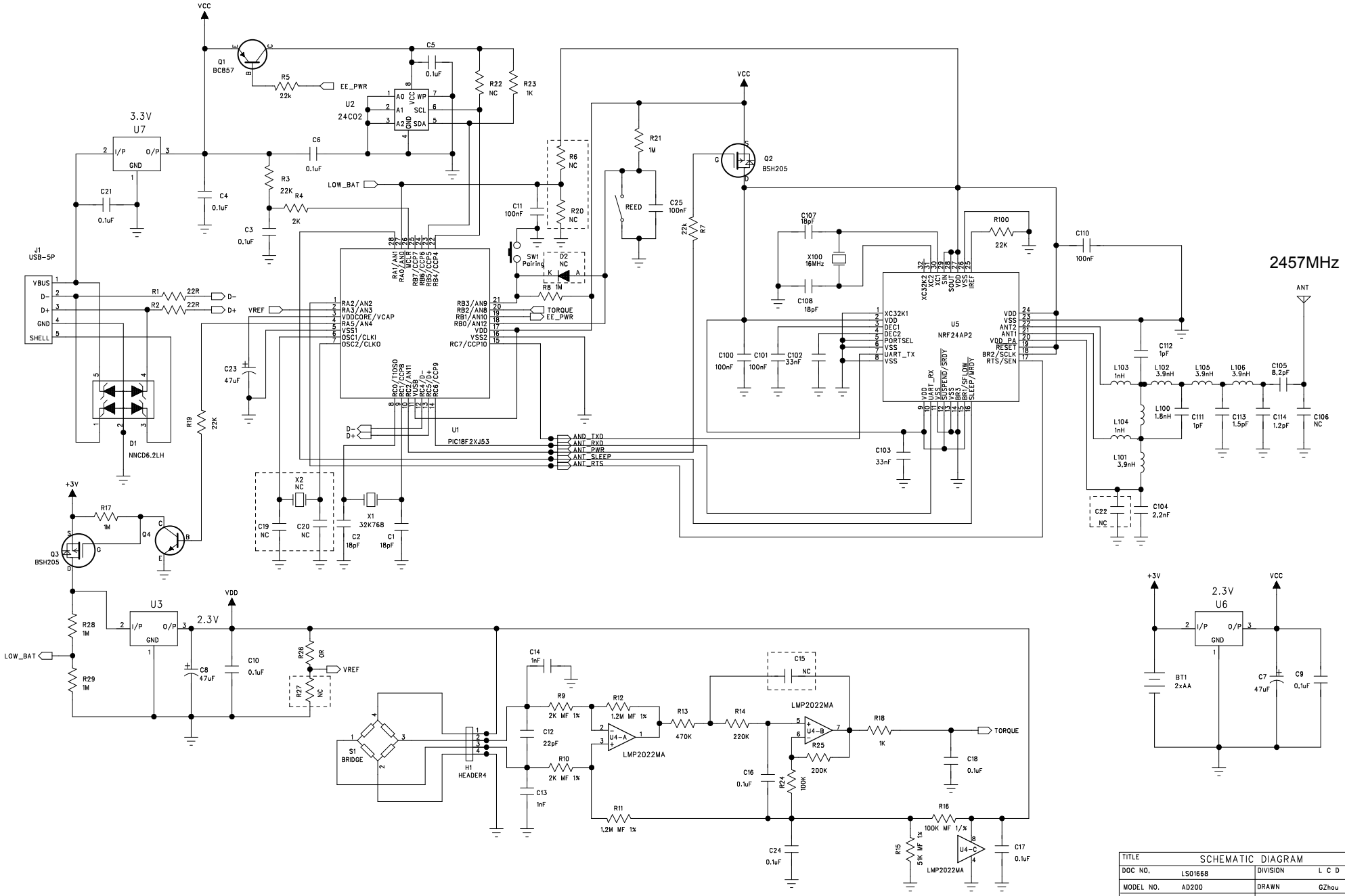

TITLE	SCHEMATIC DIAGRAM		
DOC NO.	LS01668	DIVISION	L C D
MODEL NO.	AD200	DRAWN	GZhou
CAD REF.	AD200.SCH	CHKD	ZQWU
PAGE 1	OF 1	APPD.	ZQWU
IDT TECHNOLOGY LTD.			

LCD-PDD-019-A