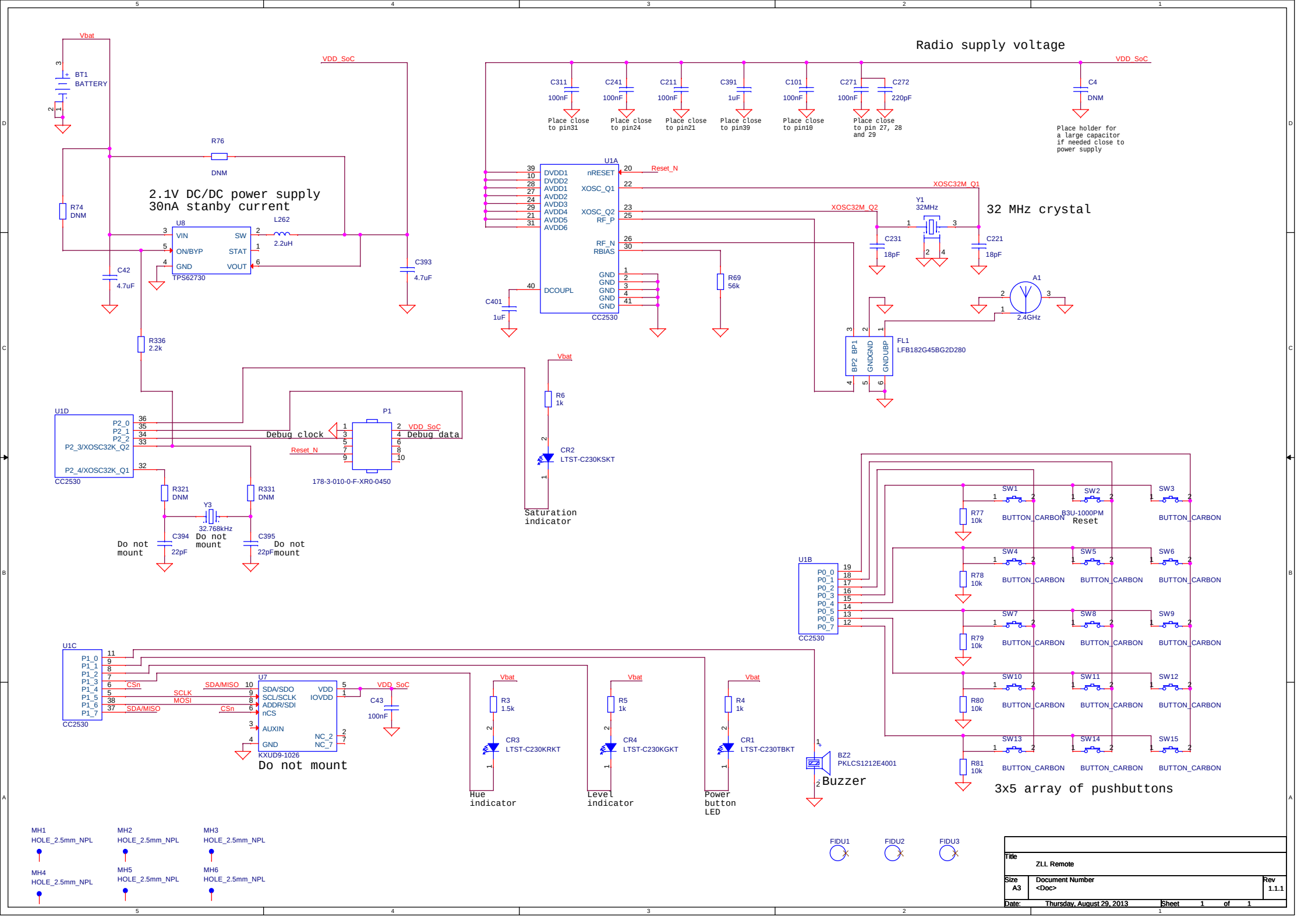
Radio supply voltage
VDD_SoC
Vbat
BT1
BATTERY
C311 100nF Place close to pin31
C241 100nF Place close to pin24
C211 100nF Place close to pin21
C391 1uF Place close to pin39
C101 100nF Place close to pin10
C271 100nF
C272 220pF
Place close to pin 27, 28 and 29
C4 DNM
Place holder for a large capacitor if needed close to power supply
R76 DNM
R74 DNM
2.1V DC/DC power supply
30nA stanby current
U8
VIN
ON/BYP
GND
SW
STAT
VOUT
TPS62730
L262 2.2uH
C42 4.7uF
C393 4.7uF
U1A
nRESET
XOSC_Q1
XOSC_Q2
RF_P
RF_N
RBIAS
DCOUPL
DVDD1
DVDD2
AVDD1
AVDD2
AVDD3
AVDD4
AVDD5
AVDD6
CC2530
Reset_N
XOSC32M_Q1
XOSC32M_Q2
Y1 32MHz
32 MHz crystal
C231 18pF
C221 18pF
R69 56k
C401 1uF
A1 2.4GHz
FL1 LFB182G45BG2D280
BP2 BP1 GNDGND GNDUBP
R336 2.2k
U1D
P2_0
P2_1
P2_2
P2_3/XOSC32K_Q2
P2_4/XOSC32K_Q1
Debug clock
Debug data
P1
178-3-010-0-F-XR0-0450
R321 DNM
R331 DNM
Y3 32.768kHz
C394 22pF
C395 22pF
Do not mount
R6 1k
CR2 LTST-C230KSKT
Saturation indicator
U1B
P0_0
P0_1
P0_2
P0_3
P0_4
P0_5
P0_6
P0_7
SW1 B3U-1000PM Reset
SW2
SW3
SW4
SW5
SW6
SW7
SW8
SW9
SW10
SW11
SW12
SW13
SW14
SW15
BUTTON_CARBON
R77 10k
R78 10k
R79 10k
R80 10k
R81 10k
3x5 array of pushbuttons
U1C
P1_0
P1_1
P1_2
P1_3
P1_4
P1_5
P1_6
P1_7
CSn
SCLK
MOSI
SDA/MISO
U7
SDA/SDO
SCL/SCLK
ADDR/SDI
nCS
AUXIN
GND
VDD
IOVDD
NC_2
NC_7
KXUD9-1026
C43 100nF
Do not mount
R3 1.5k
CR3 LTST-C230KRKT
Hue indicator
R5 1k
CR4 LTST-C230KGKT
Level indicator
R4 1k
CR1 LTST-C230TBKT
Power button LED
BZ2 PKLCS1212E4001
Buzzer
MH1 HOLE_2.5mm_NPL
MH2 HOLE_2.5mm_NPL
MH3 HOLE_2.5mm_NPL
MH4 HOLE_2.5mm_NPL
MH5 HOLE_2.5mm_NPL
MH6 HOLE_2.5mm_NPL
FIDU1
FIDU2
FIDU3
Title
ZLL Remote
Size A3
Document Number <Doc>
Rev 1.1.1
Date: Thursday, August 29, 2013
Sheet 1 of 1