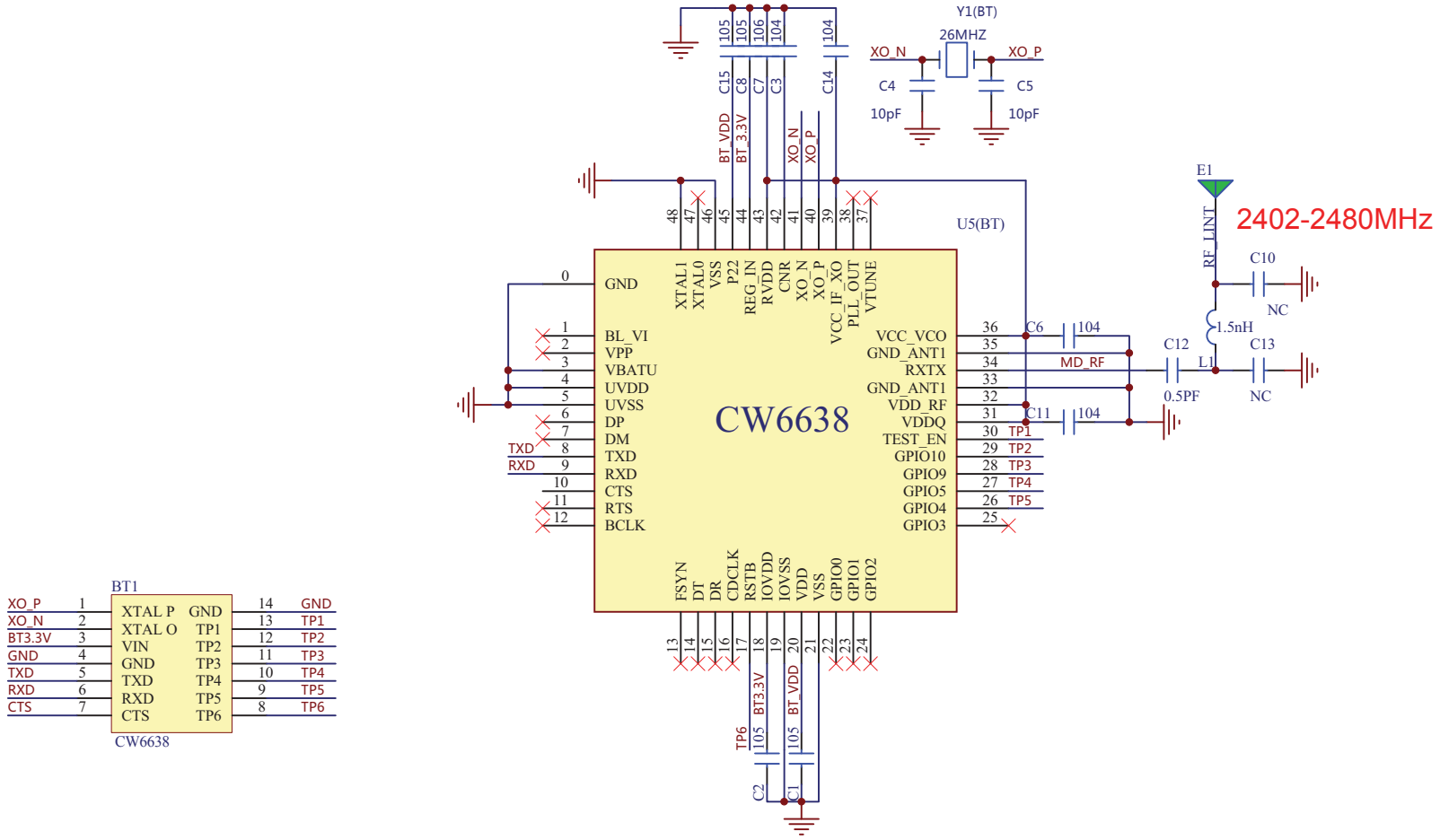
Y1(BT)
26MHZ
XO_N
XO_P
C4
10pF
C5
10pF
C15
C8
C7
C3
C14
BT_VDD
BT_3.3V
U5(BT)
CW6638
GND
BL_VI
VPP
VBATU
UVDD
UVSS
DP
DM
TXD
RXD
CTS
RTS
BCLK
XTAL1
XTAL0
VSS
P22
REG_IN
RVDD
CNR
VCC_IF_XO
PLL_OUT
VTUNE
VCC_VCO
GND_ANT1
RXTX
VDD_RF
VDDQ
TEST_EN
GPIO10
GPIO9
GPIO5
GPIO4
GPIO3
FSYN
DT
DR
CDCLK
RSTB
IOVDD
IOVSS
VDD
GPIO0
GPIO1
GPIO2
TP1
TP2
TP3
TP4
TP5
TP6
C6
104
C11
104
MD_RF
C12
0.5PF
E1
RF_LINT
2402-2480MHz
C10
NC
1.5nH
L1
C13
NC
BT1
XO_P
XO_N
BT3.3V
GND
TXD
RXD
CTS
XTAL P
XTAL O
VIN
GND
TXD
RXD
CTS
GND
TP1
TP2
TP3
TP4
TP5
TP6
CW6638
C2
C1

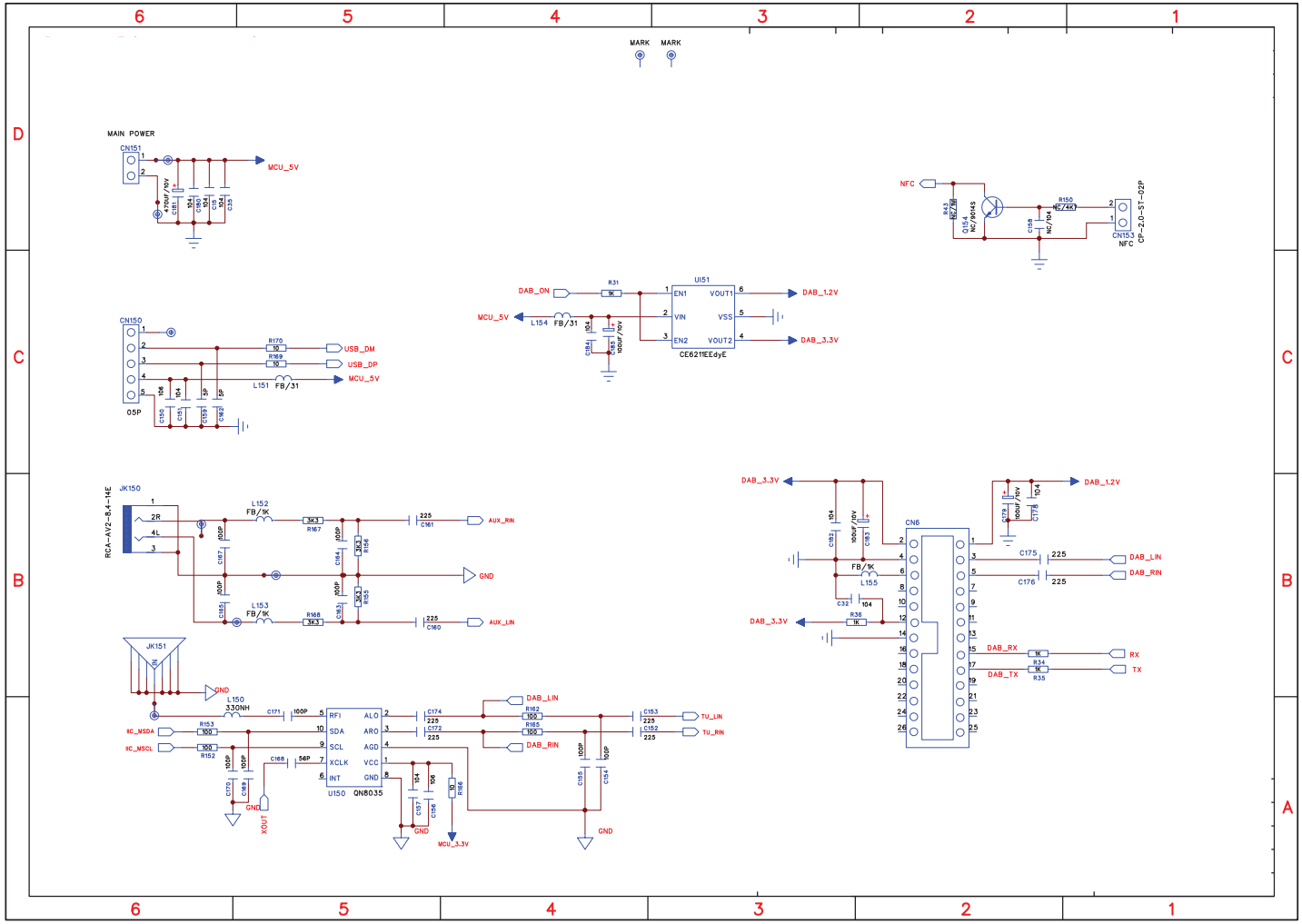
MARK
MARK
MAIN POWER
CN151
MCU_5V
NFC
CN153
CP-2.0-ST-02P
CN150
05P
USB_DM
USB_DP
MCU_5V
L151 FB/31
DAB_ON
MCU_5V
L154 FB/31
U151
CE6211EEdyE
DAB_1.2V
DAB_3.3V
JK150
RCA-AV2-8.4-14E
L152 FB/1K
L153 FB/1K
AUX_RIN
AUX_LIN
GND
JK151
L150 330NH
IIC_MSDA
IIC_MSCL
U150 QN8035
RFI
SDA
SCL
XCLK
INT
ALO
ARO
AGD
VCC
GND
XOUT
DAB_LIN
DAB_RIN
TU_LIN
TU_RIN
MCU_3.3V
CN6
DAB_3.3V
DAB_1.2V
DAB_LIN
DAB_RIN
DAB_RX
DAB_TX
RX
TX

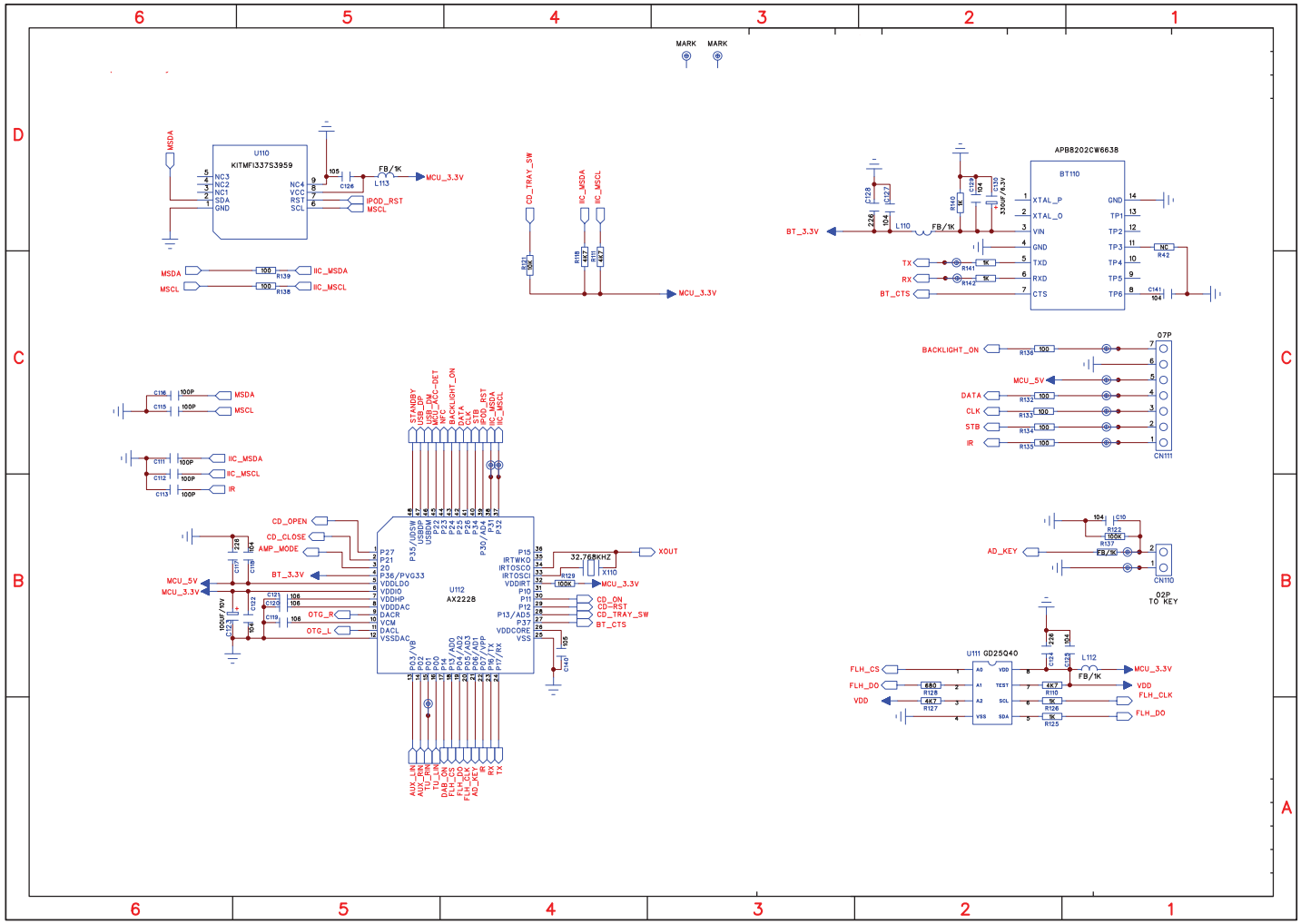

MARK
MARK
U110
KITMFI337S3959
NC3
NC2
NC1
SDA
GND
NC4
VCC
RST
SCL
MSDA
MSCL
IPOD_RST
FB/1K
L113
MCU_3.3V
IIC_MSDA
IIC_MSCL
CD_TRAY_SW
APB8202CW6638
BT110
XTAL_P
XTAL_O
VIN
GND
TXD
RXD
CTS
TP1
TP2
TP3
TP4
TP5
TP6
BT_3.3V
TX
RX
BT_CTS
L110
BACKLIGHT_ON
MCU_5V
DATA
CLK
STB
IR
CN111
07P
AD_KEY
CN110
02P
TO KEY
U111 GD25Q40
FLH_CS
FLH_DO
VDD
FLH_CLK
L112
U112
AX2228
P27
P21
P20
P36/PVG33
VDDLDO
VDDIO
VDDHP
VDDDAC
DACR
VCM
DACL
VSSDAC
P15
IRTWKO
IRTOSCO
IRTOSCI
VDDIRT
P10
P11
P12
P13/AD5
P37
VDDCORE
VSS
32.768KHZ
X110
XOUT
CD_OPEN
CD_CLOSE
AMP_MODE
OTG_R
OTG_L
CD_ON
CD-RST
CD_TRAY_SW
BT_CTS

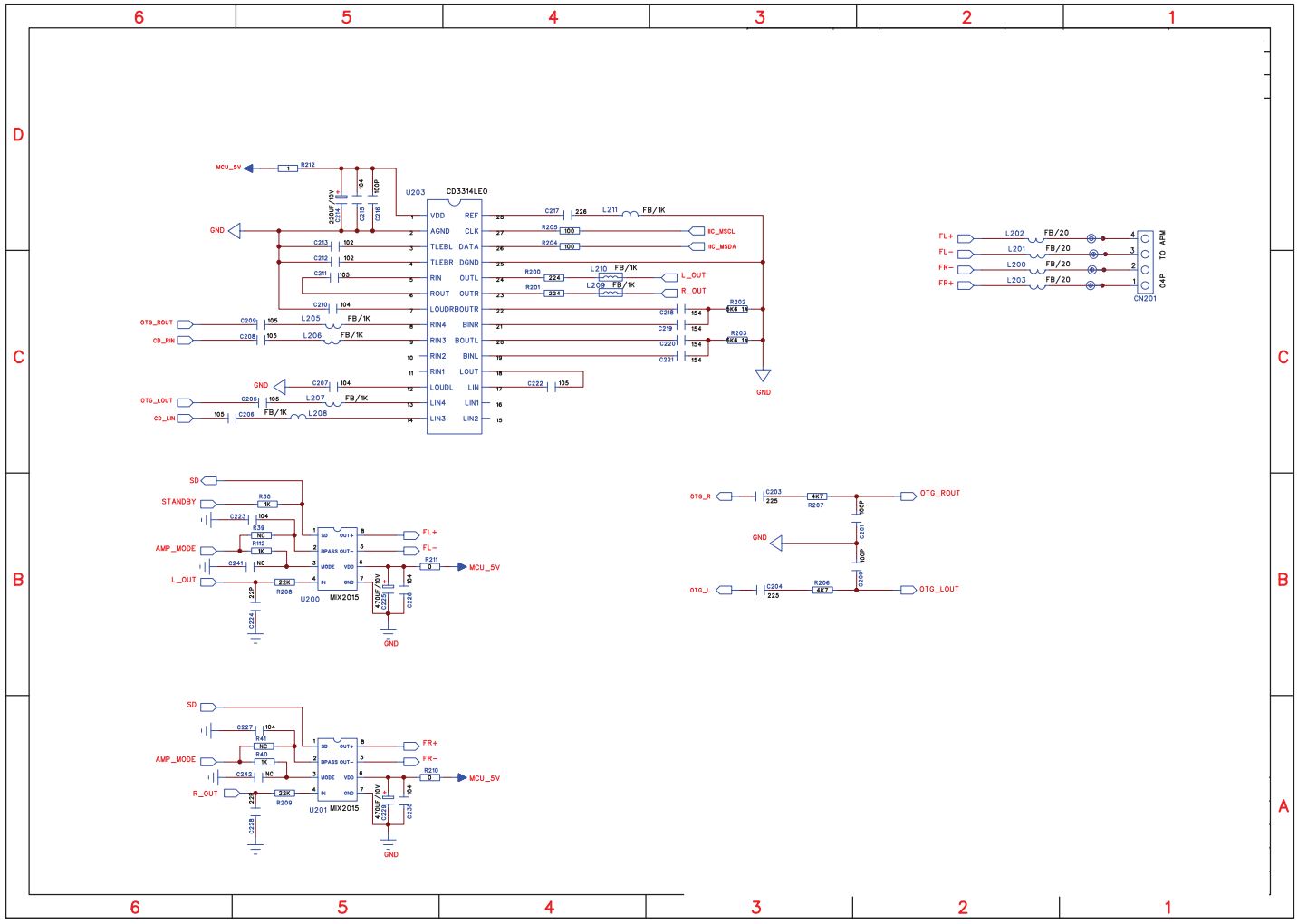
U203
CD3314LEO
VDD
AGND
TLEBL
TLEBR
RIN
ROUT
LOUDR
RIN4
RIN3
RIN2
RIN1
LOUDL
LIN4
LIN3
REF
CLK
DATA
DGND
OUTL
OUTR
BOUTR
BINR
BOUTL
BINL
LOUT
LIN
LIN1
LIN2
MCU_5V
GND
SC_MSCL
SC_MSDA
L_OUT
R_OUT
OTG_ROUT
CD_RIN
OTG_LOUT
CD_LIN
FB/1K
U200
MIX2015
U201
MIX2015
SD
STANDBY
AMP_MODE
L_OUT
R_OUT
FL+
FL−
FR+
FR−
MCU_5V
OTG_R
OTG_L
OTG_ROUT
OTG_LOUT
FB/20
CN201
TO APM
CAP

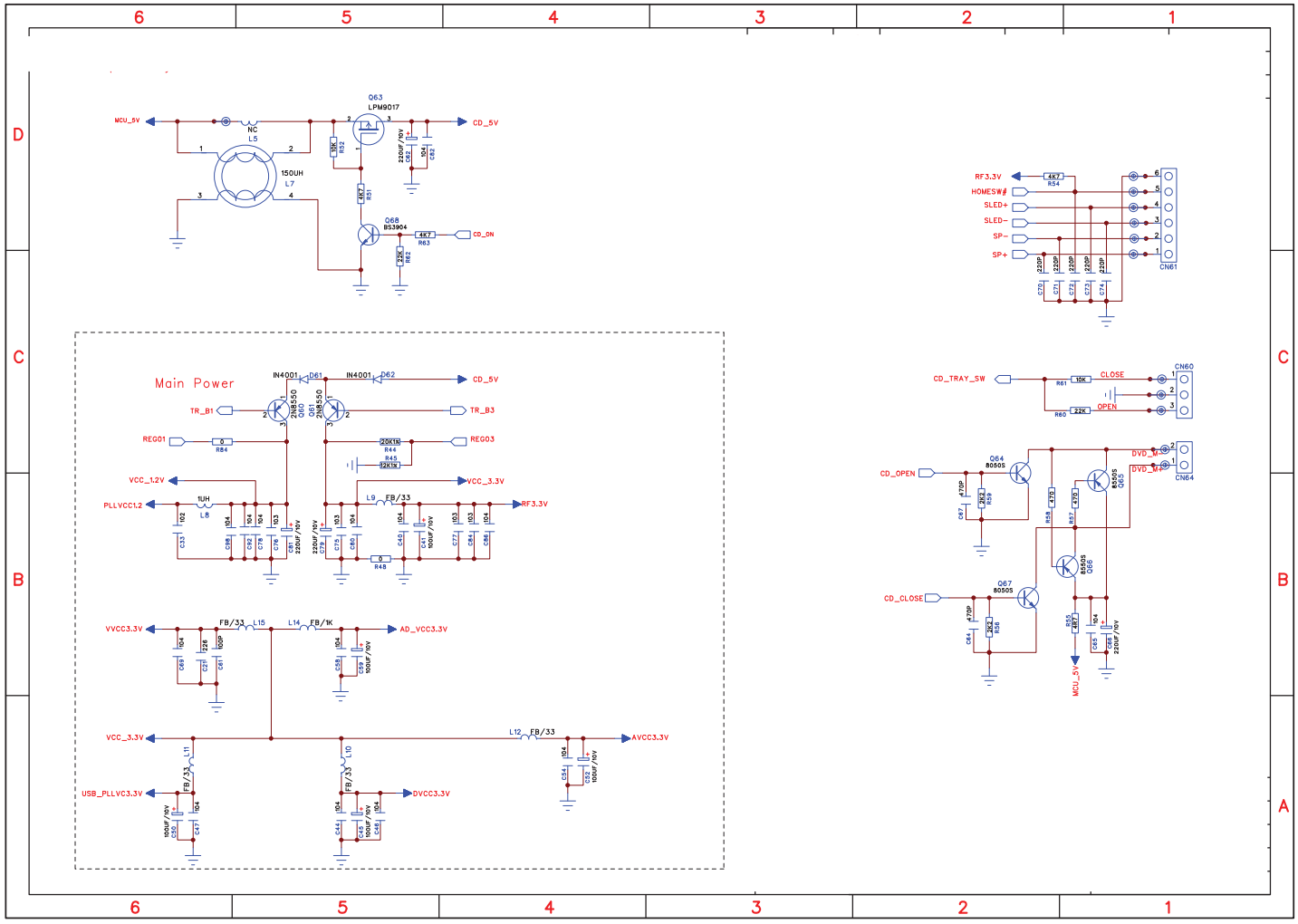

Main Power
MCU_5V
CD_5V
CD_ON
Q63
LPM9017
Q68
BS3904
L5
L7
150UH
RF3.3V
HOMESW#
SLED+
SLED-
SP-
SP+
CN61
CD_TRAY_SW
CLOSE
OPEN
CN60
CD_OPEN
CD_CLOSE
Q64
8050S
Q65
Q66
Q67
DVD_M3
DVD_M4
CN64
TR_B1
TR_B3
REG01
REG03
VCC_1.2V
VCC_3.3V
PLLVCC1.2
RF3.3V
VVCC3.3V
AD_VCC3.3V
VCC_3.3V
AVCC3.3V
USB_PLLVC3.3V
DVCC3.3V

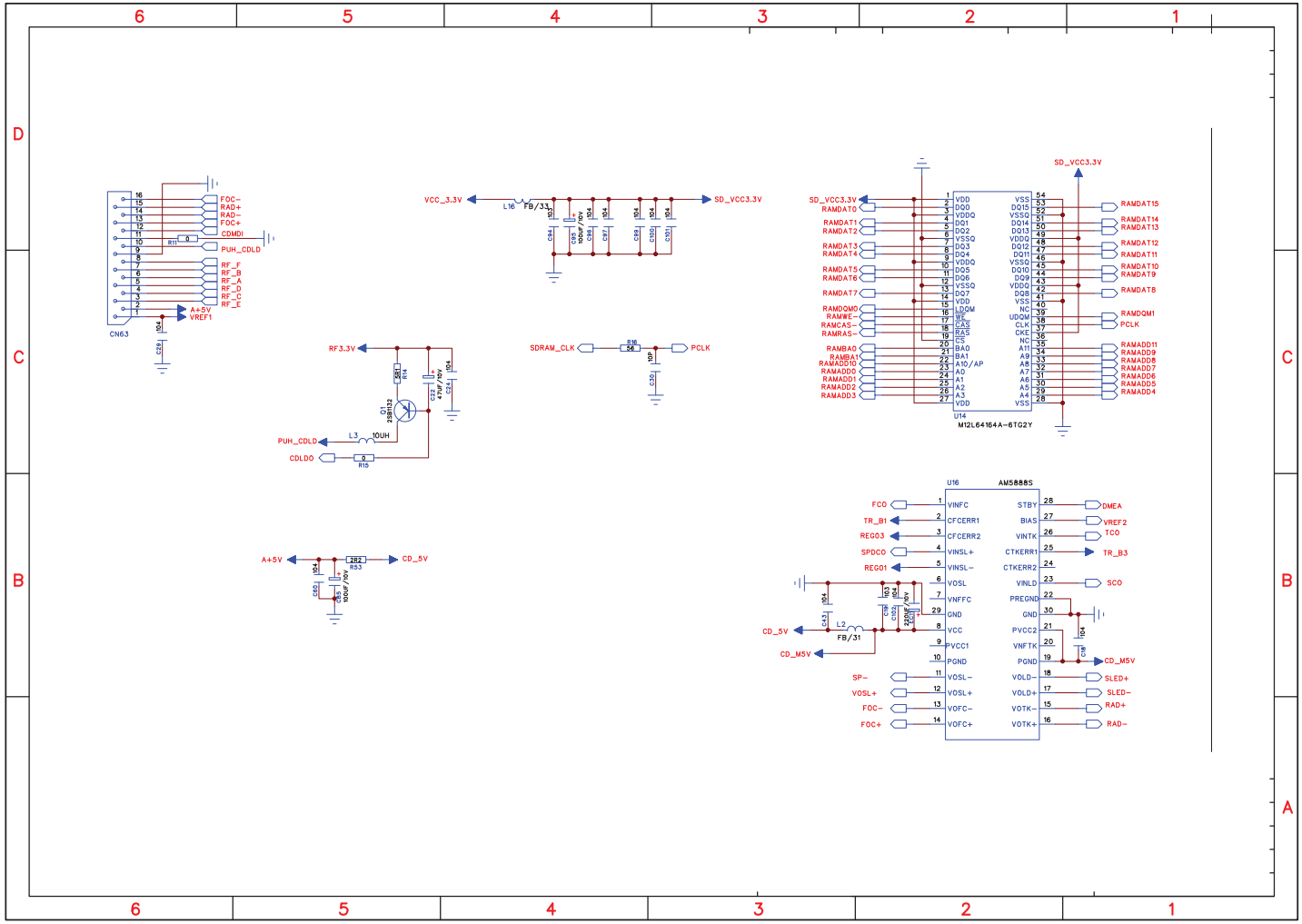
CN63
FOC-
RAD+
RAD-
FOC+
CDMDI
PUH_CDLD
RF_F
RF_B
RF_A
RF_D
RF_C
RF_E
A+5V
VREF1
R11
0
C29
104
VCC_3.3V
L16
FB/33
SD_VCC3.3V
C94
C97
100UF/10V
C96
C97
C98
C100
C101
104
RF3.3V
R14
281
Q1
2SB132
C22
47UF/10V
C24
PUH_CDLD
L3
10UH
CDLDO
R15
0
SDRAM_CLK
R16
56
PCLK
C35
10P
A+5V
R83
282
CD_5V
C100
C99
100UF/10V
U14
M12L64164A-6TG2Y
VDD
DQ0
VDDQ
DQ1
DQ2
VSSQ
DQ3
DQ4
VDDQ
DQ5
DQ6
VSSQ
DQ7
VDD
LDQM
WE
CAS
RAS
CS
BA0
BA1
A10/AP
A0
A1
A2
A3
VDD
VSS
DQ15
VSSQ
DQ14
DQ13
VDDQ
DQ12
DQ11
VSSQ
DQ10
DQ9
VDDQ
DQ8
VSS
NC
UDQM
CLK
CKE
NC
A11
A9
A8
A7
A6
A5
A4
VSS
RAMDAT0
RAMDAT1
RAMDAT2
RAMDAT3
RAMDAT4
RAMDAT5
RAMDAT6
RAMDAT7
RAMDQM0
RAMWE-
RAMCAS-
RAMRAS-
RAMBA0
RAMBA1
RAMADD10
RAMADD0
RAMADD1
RAMADD2
RAMADD3
RAMDAT15
RAMDAT14
RAMDAT13
RAMDAT12
RAMDAT11
RAMDAT10
RAMDAT9
RAMDAT8
RAMDQM1
PCLK
RAMADD11
RAMADD9
RAMADD8
RAMADD7
RAMADD6
RAMADD5
RAMADD4
U16
AM5888S
VINFC
CFCERR1
CFCERR2
VINSL+
VINSL-
VOSL
VNFFC
GND
VCC
PVCC1
PGND
VOSL-
VOSL+
VOFC-
VOFC+
STBY
BIAS
VINTK
CTKERR1
CTKERR2
VINLD
PREGND
GND
PVCC2
VNFTK
PGND
VOLD-
VOLD+
VOTK-
VOTK+
FCO
TR_B1
REG03
SPDCO
REG01
SP-
VOSL+
FOC-
FOC+
DMEA
VREF2
TCO
TR_B3
SCO
CD_M5V
SLED+
SLED-
RAD+
RAD-
CD_5V
CD_M5V
C43
L2
FB/31
C98
C99
220UF/10V
C100
C18
104
103
102
SD_VCC3.3V

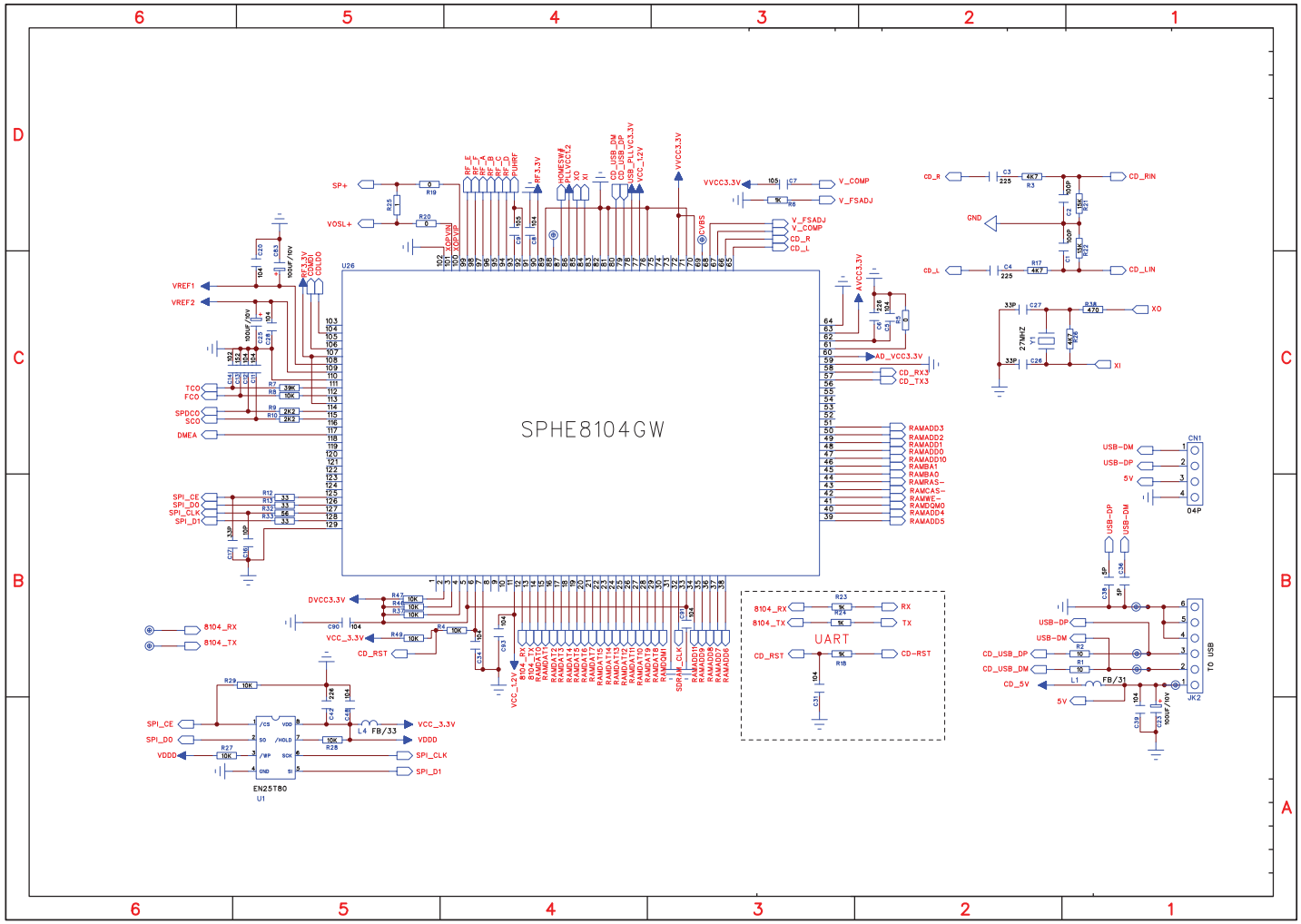
SPHE8104GW
U26
SP+
VOSL+
VREF1
VREF2
TCO
FCO
SPDCO
SCO
DMEA
SPI_CE
SPI_DO
SPI_CLK
SPI_D1
8104_RX
8104_TX
DVCC3.3V
VCC_3.3V
CD_RST
VVCC3.3V
V_COMP
V_FSADJ
CVBS
CD_R
CD_L
CD_RIN
CD_LIN
GND
XO
XI
27MHZ
AD_VCC3.3V
CD_RX3
CD_TX3
RAMADD3
RAMADD2
RAMADD1
RAMADD0
RAMADD10
RAMBA1
RAMBA0
RAMRAS-
RAMCAS-
RAMWE-
RAMDQM0
RAMADD4
RAMADD5
UART
RX
TX
CD-RST
USB-DM
USB-DP
5V
CN1
04P
CD_USB_DP
CD_USB_DM
CD_5V
TO USB
JK2
EN25T80
U1
L4 FB/33
FB/31
VDDD

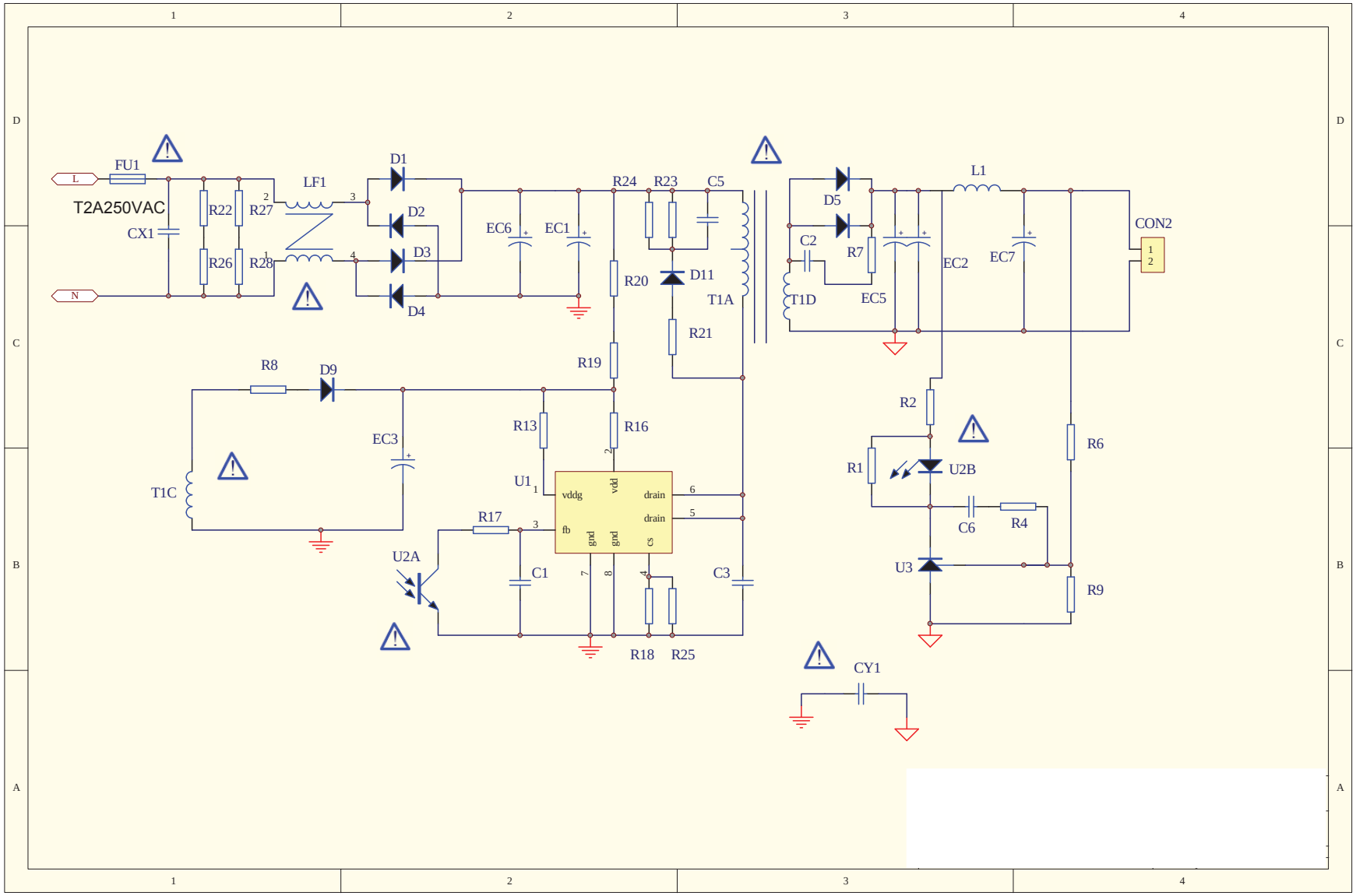
L
N
FU1
T2A250VAC
CX1
R22
R26
R27
R28
LF1
D1
D2
D3
D4
EC6
EC1
R24
R23
C5
R20
D11
R21
T1A
R19
R8
D9
EC3
T1C
R13
R16
U1
vddg
vdd
drain
drain
fb
gnd
gnd
cs
R17
U2A
C1
C3
R18
R25
D5
C2
R7
T1D
EC5
EC2
EC7
L1
CON2
R2
R1
U2B
C6
R4
U3
R6
R9
CY1

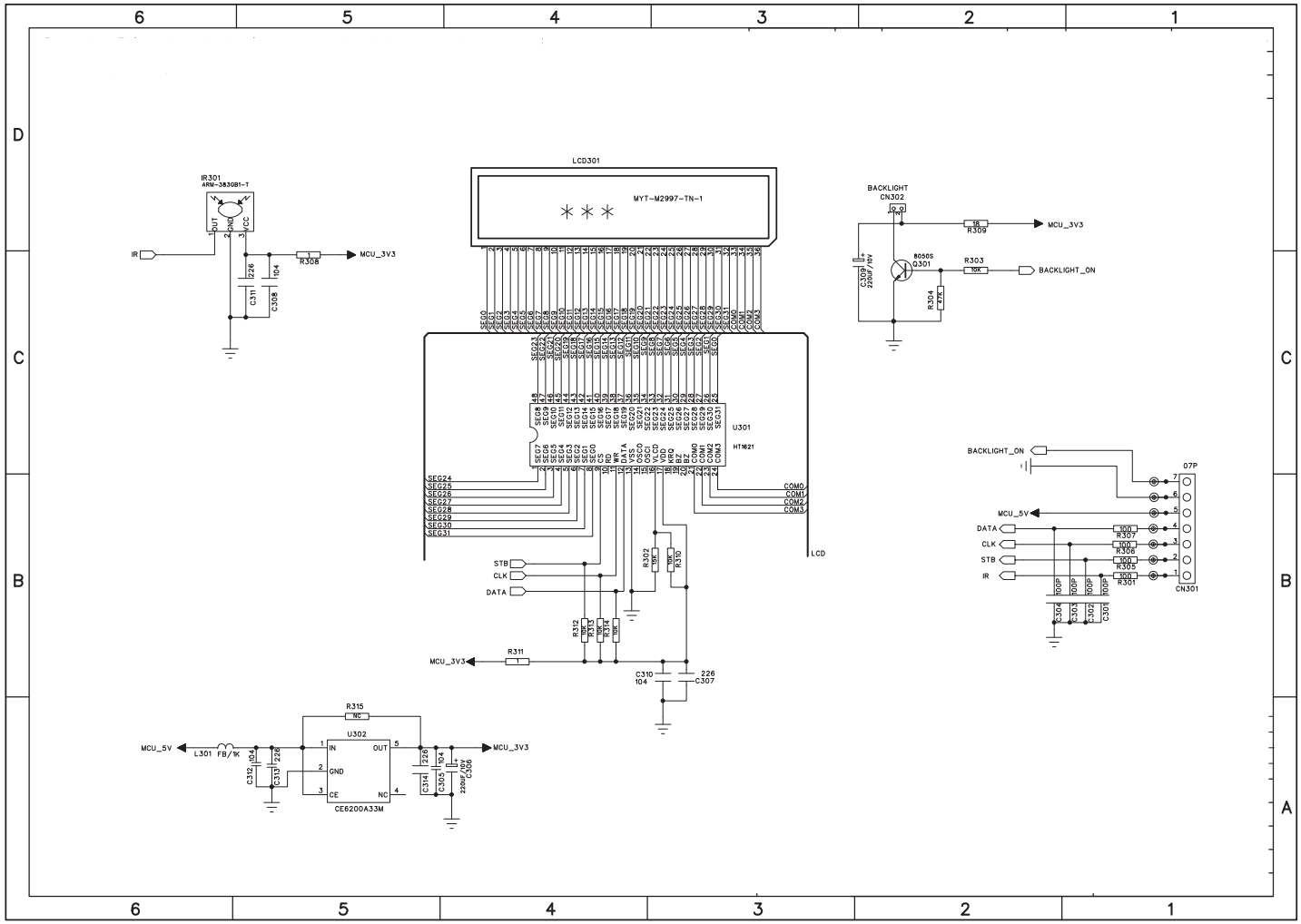

LCD301
MYT-M2997-TN-1
IR301
ARM-383GB1-T
IR
MCU_3V3
R308
C311
C308
BACKLIGHT
CN302
R309
8050S
Q301
R303
BACKLIGHT_ON
C309
220UF/10V
R304
U301
HT1621
LCD
STB
CLK
DATA
R302
R310
R312
R313
R314
R311
C310
104
226
C307
BACKLIGHT_ON
07P
MCU_5V
DATA
CLK
STB
IR
R307
R306
R305
R301
CN301
C304
C303
C302
C301
R315
U302
IN
OUT
GND
CE
NC
CE6200A33M
MCU_5V
L301 FB/1K
C312
C313
C314
C305
C306
220UF/10V

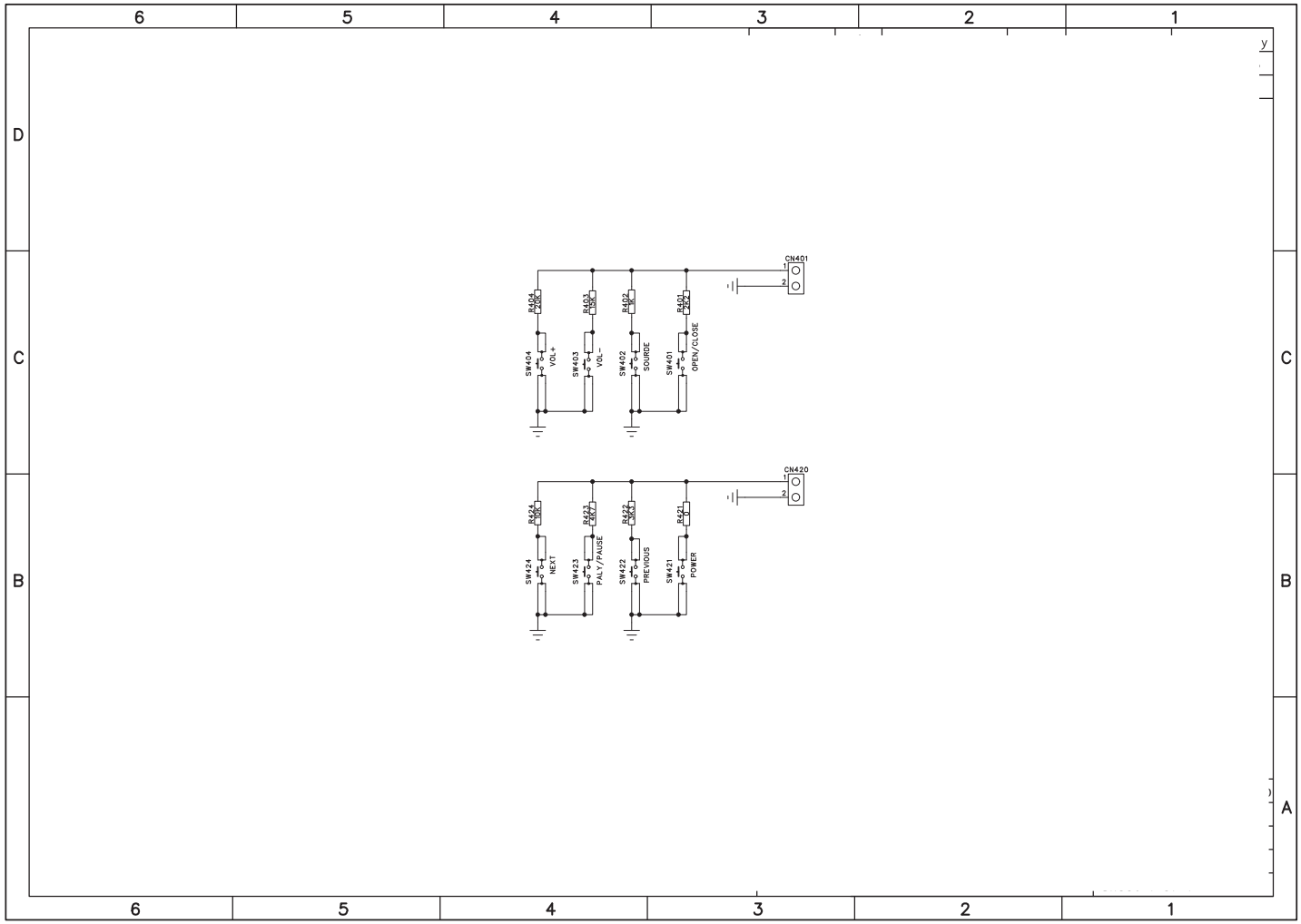
CN401
R404
20K
R403
15K
R402
1K
R401
25K
SW404
VOL+
SW403
VOL-
SW402
SOURDE
SW401
OPEN/CLOSE
CN420
R424
10K
R423
47K
R422
3K3
R421
SW424
NEXT
SW423
PALY/PAUSE
SW422
PREVIOUS
SW421
POWER

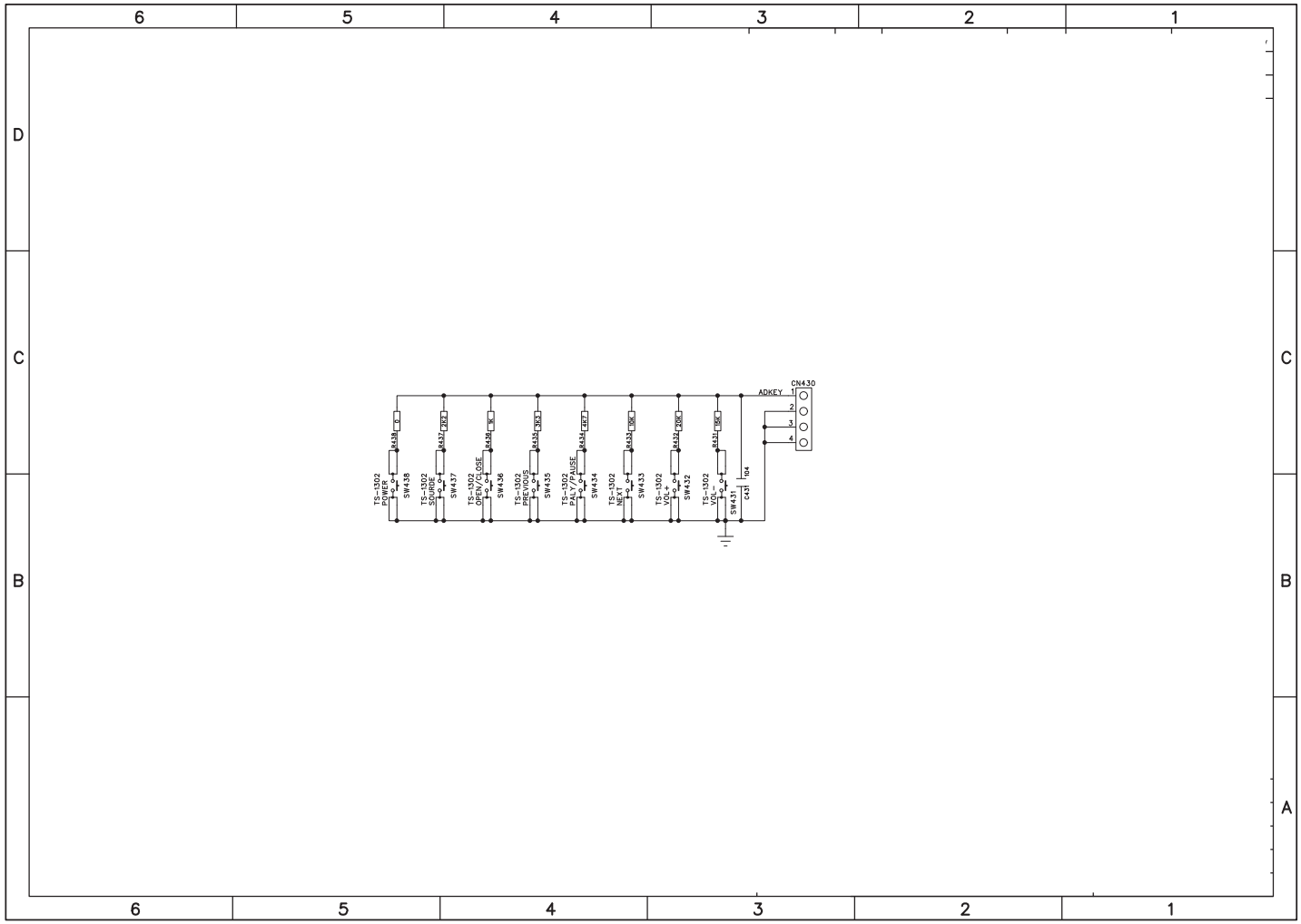

CN430
ADKEY
1
2
3
4
TS-1302 POWER
SW438
R438
D
TS-1302 SOURDE
SW437
R437
2K2
TS-1302 OPEN/CLOSE
SW436
R436
K
TS-1302 PREVIOUS
SW435
R435
3K3
TS-1302 PALY/PAUSE
SW434
R434
4K7
TS-1302 NEXT
SW433
R433
10K
TS-1302 VOL+
SW432
R432
20K
TS-1302 VOL-
SW431
R431
10K
C431
104

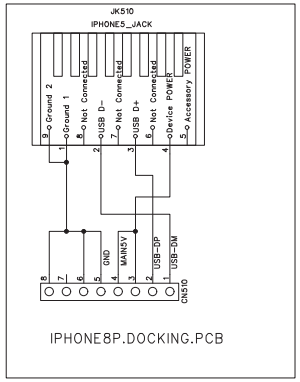
JK510
IPHONE5_JACK
9 Ground 2
1 Ground 1
8 Not Connected
2 USB D-
7 Not Connected
3 USB D+
6 Not Connected
4 Device POWER
5 Accessory POWER
8
7
6
5
4
3
2
1
GND
MAINSV
USB-DP
USB-DM
CN510
IPHONE8P.DOCKING.PCB

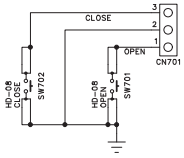
HD-08
CLOSE
SW702
HD-08
OPEN
SW701
CLOSE
OPEN
3
2
1
CN701