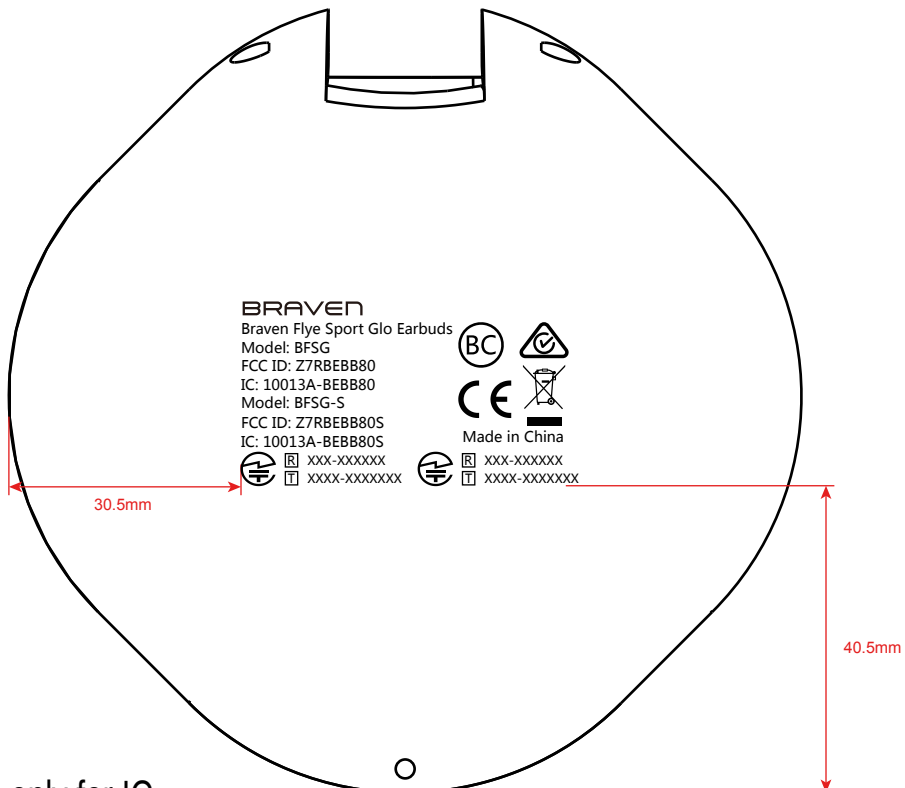

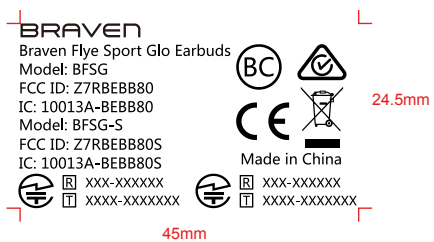

Model:BFSG-S is only for IC