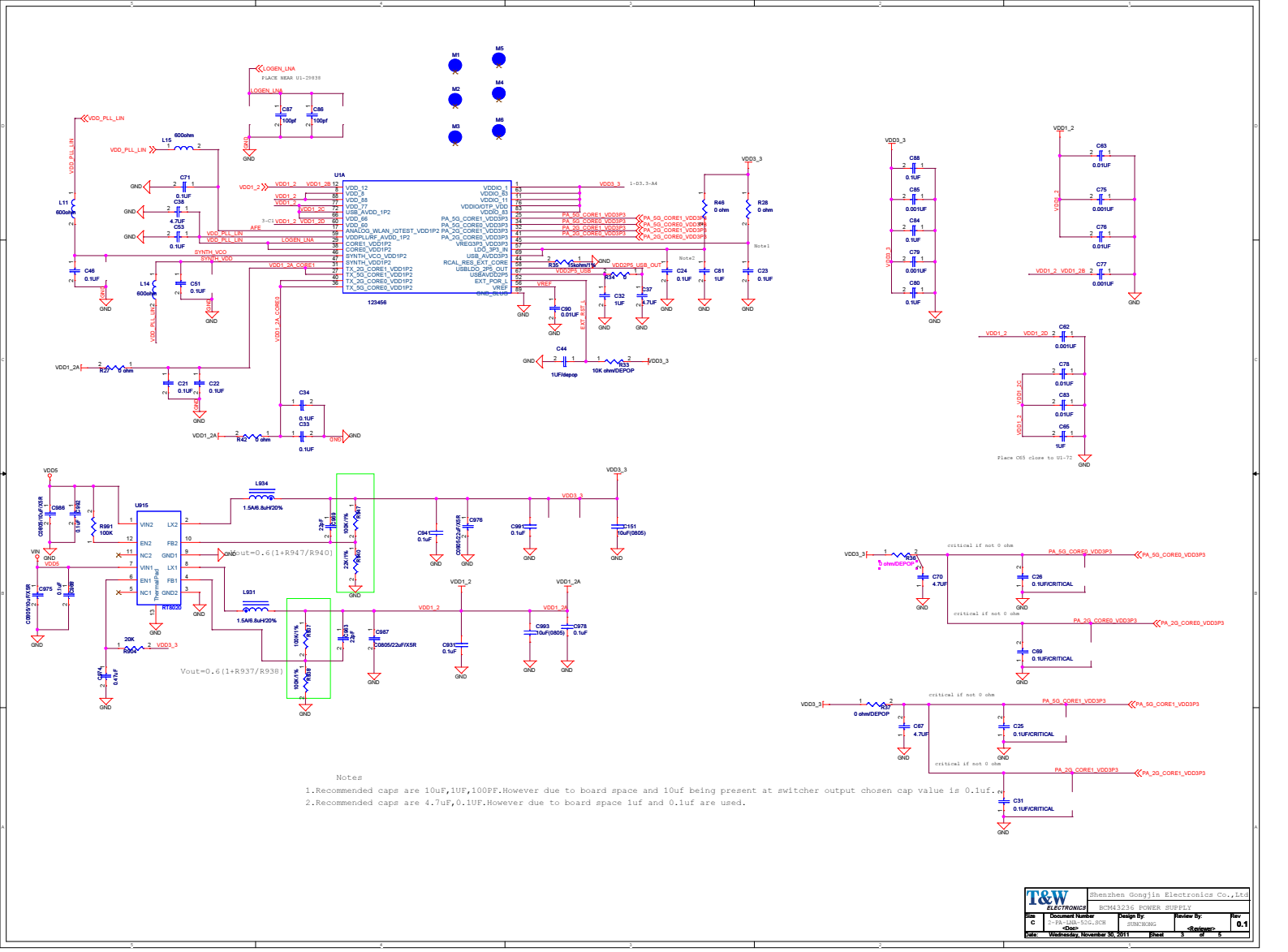

Notes

1.Recommended caps are 10uF,1UF,100PF.However due to board space and 10uf being present at switcher output chosen cap value is 0.1uf.

2.Recommended caps are 4.7uF,0.1UF.However due to board space 1uf and 0.1uf are used.

T&W ELECTRONICS	Shenzhen Gongjin Electronics Co.,Ltd		
	BCM43236 POWER SUPPLY		
Size: C	Document Number: 2-PA-DA-52G.SCH	Design By: SUNCHONG	Review By: <Reviewer>
	<Doc>		Rev: 0.1
Date: Wednesday, November 30, 2011	Sheet 3 of 5		

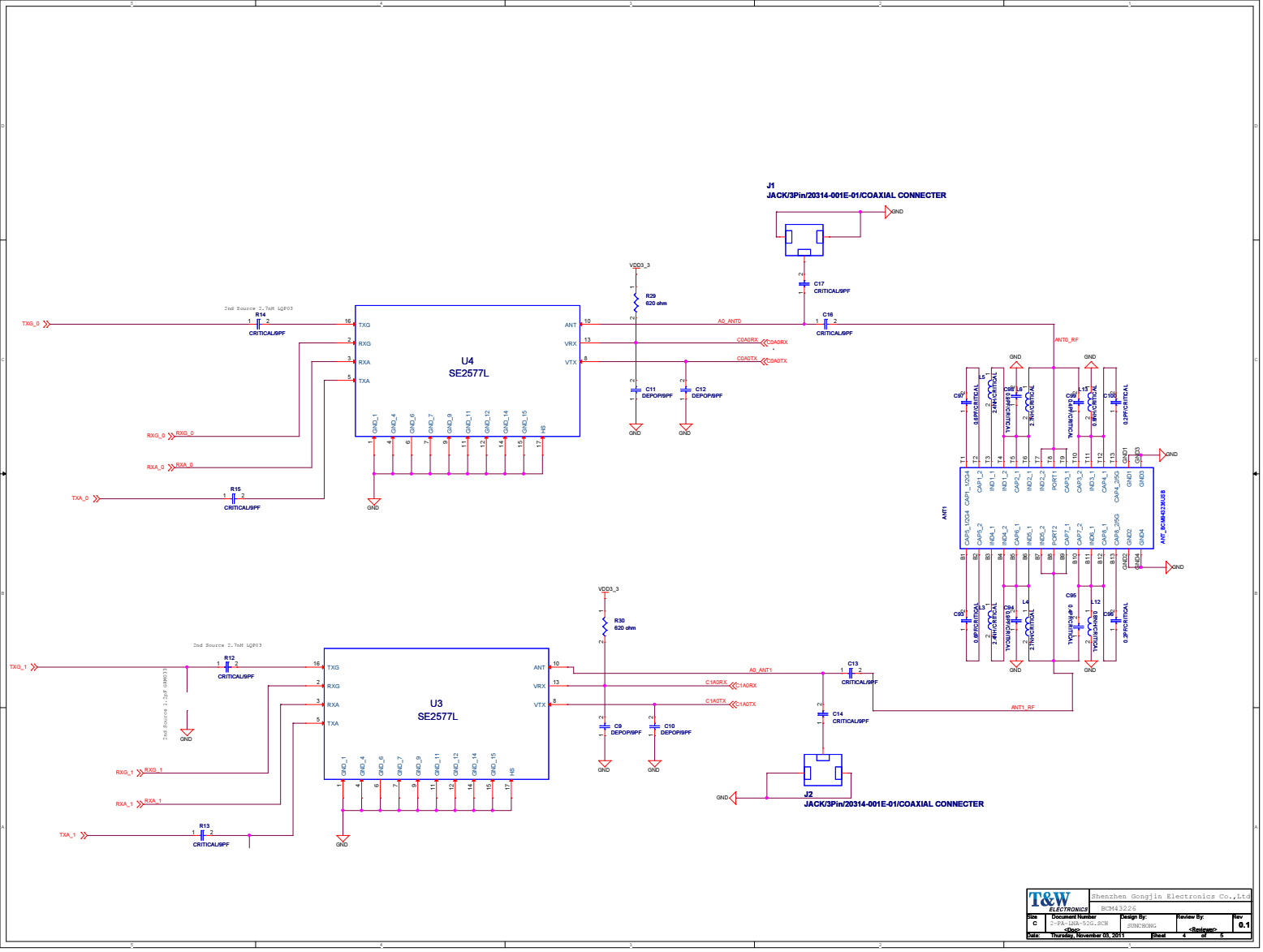

T&W ELECTRONICS	Shenzhen Gongjin Electronics Co.,Ltd		
Size C	Document Number 2-PA-WA-52G.SCH	Design By: SUNCHONG	Review By: <Reviewer>	Rev 0.1
Date: Thursday, November 03, 2011	Sheet 4 of 5		

Pad	chip default	description
mimophy core1 ant0 tx	0	0=SFLASH NOT PRESENT/1=SFLASH PRESENT
mimophy core0 ant0 rx	0	1=SFLASH Type is Atmel/0=SFLASH Type is ST
mimophy core0 ant0 tx	1	0=OTP NOT PRESENT/1=OTP PRESENT
mimophy core0 ant1 tx	1	0=HSIC mode/1=USBphymode
mimophy core0 ant1 rx	1	0=backplane at 96(98.4)MHZ/1=backplane at 120(123)MHZ

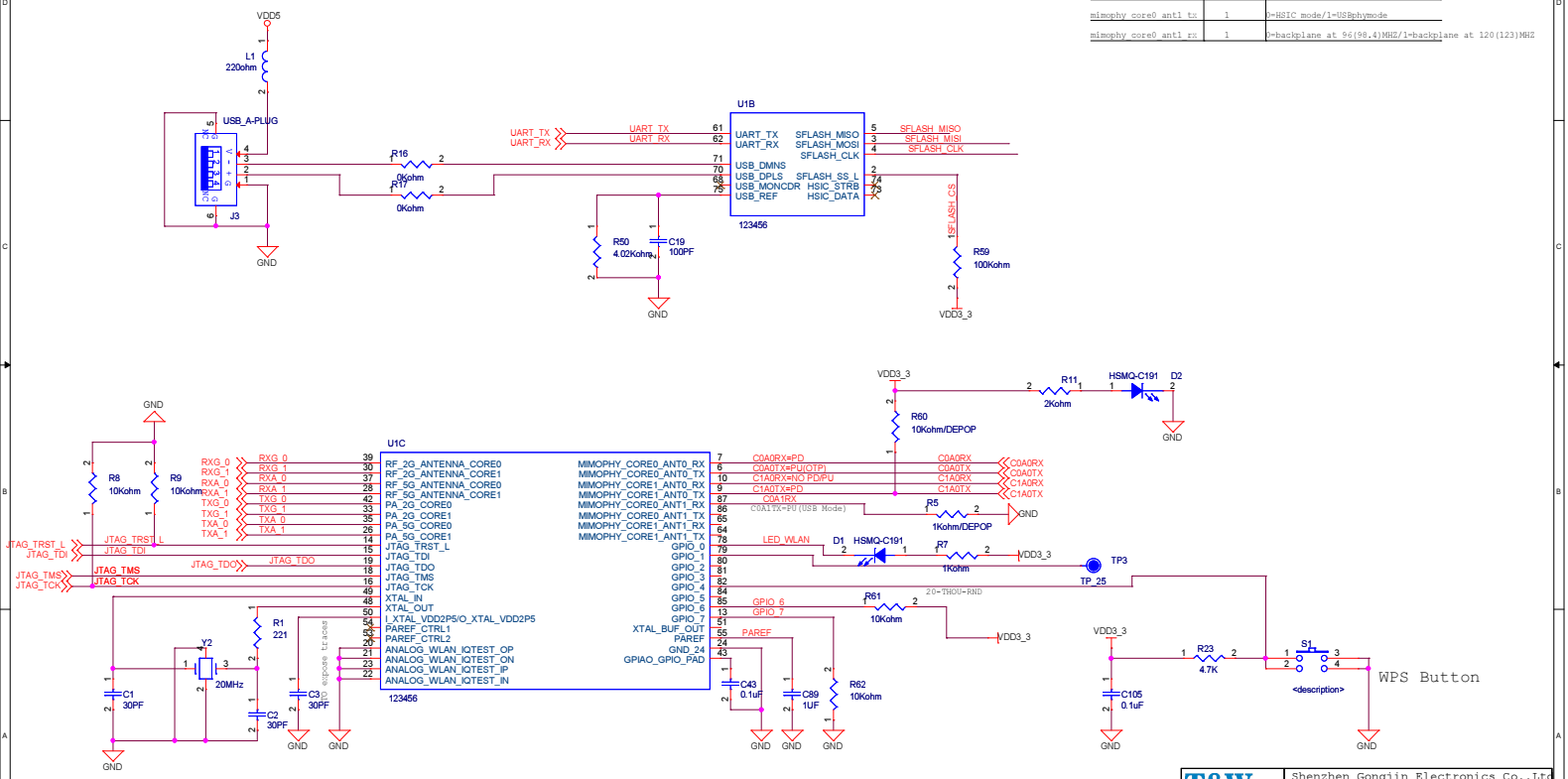

T&W ELECTRONICS	Shenzhen Gongjin Electronics Co.,Ltd		
	BCM43236USB		
Size B	Document Number 3-FrontEnd.SCH <Doc>	Design By: SUNCHONG	Review By: <Reviewer>	Rev 0.1
Date: Wednesday, April 21, 2010		Sheet 5 of 5	