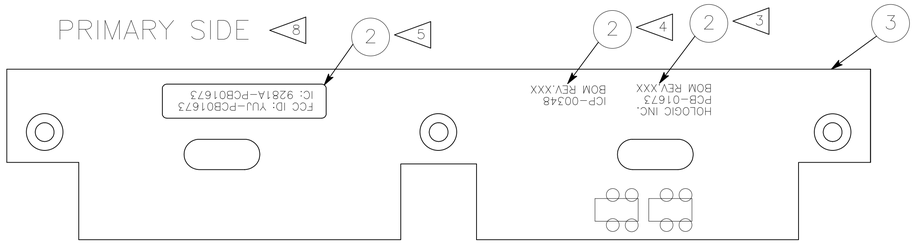

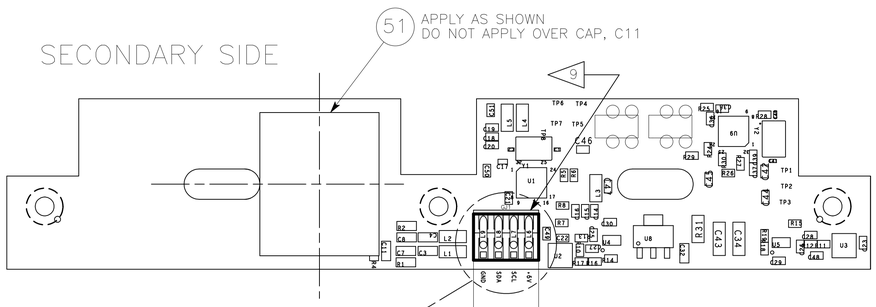

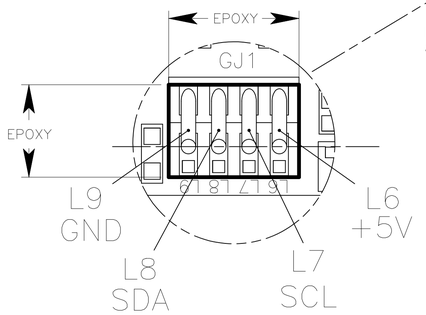

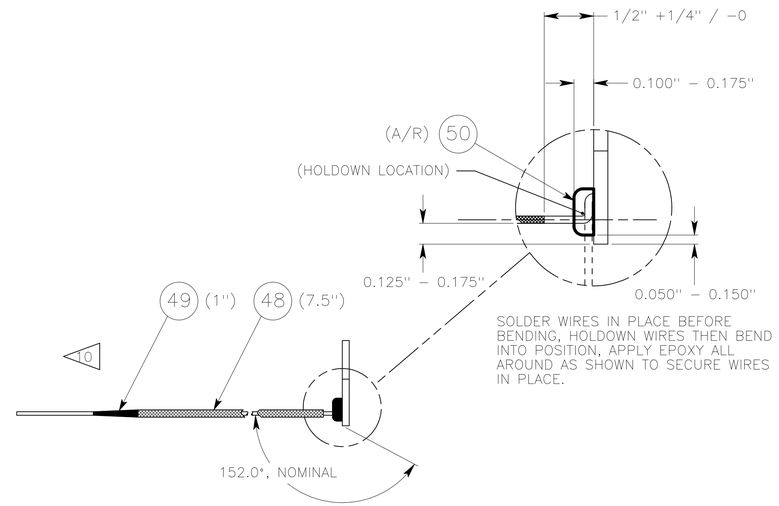

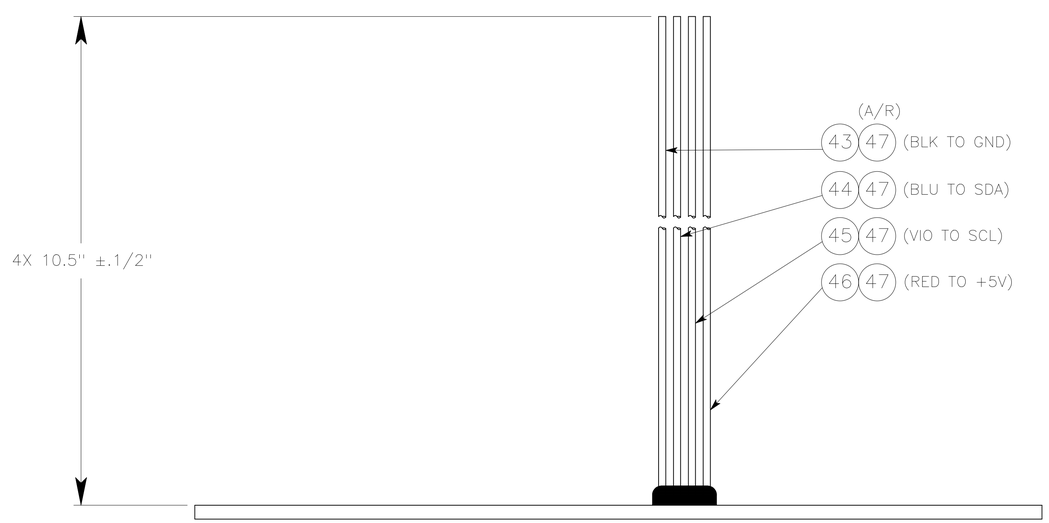

11. R4 NOT POPULATED.

10. CUT A 7.5 INCH PIECE OF (ITEM 48) BRAIDED SLEEVING AND USING THE TIP OF A SOLDERING IRON, TOUCH THE CUT ENDS OF THE SLEEVING TO PREVENT FRAYING. PLACE THE SLEEVING OVER WIRES AS SHOWN.
CUT A 1 INCH PIECE OF (ITEM 49) SHRINK TUBING AND PLACE OVER THE BRAIDED SLEEVING AND WIRES, SHRINK TUBING.

9. GJ1 TO BE USED FOR SOLDER CONNECTIONS.

8. USING ITEM 200 LABEL. SERIALIZE PER QUA–1548 IN APPROPRIATE AREA ON PRIMARY SIDE. PHYSICAL LOCATION OF LABEL PLACEMENT TO BE DETERMINED BY PCB SUPPLIER.

7. LABEL ASSEMBLY RoHS COMPLIANT. BOARD MUST COMPLY WITH RoHS AND REACH STANDARDS DOCUMENT ST–00192.

6. UNLESS OTHERWISE SPECIFIED: THIS ASSEMBLY IS TO MEET OR EXCEED IPC–A–610(LATEST REV.) CLASS 2 WORKMANSHIP STANDARDS.

5. LABEL USING ITEM 2, APPROXIMATELY AS SHOWN.

4. LABEL USING ITEM 2, FIRMWARE NUMBER AND BOM REVISION. ICP–00348 REV.XXX APPROXIMATELY AS SHOWN.

3. LABEL USING ITEM 2, PCB NUMBER AND BOM REVISION. PCB–01673 REV.XXX APPROXIMATELY AS SHOWN.

2. SOME ITEMS NOT SHOWN IN ALL VIEWS AND DETAILS.

1. REF. DRAWING : DO NOT SCALE.

ALL MATERIALS, COMPONENTS, AND FINISHES MUST COMPLY WITH ENVIRONMENTAL COMPLIANCE STANDARDS DOCUMENT ST–00192, UNLESS OTHERWISE SPECIFIED.

PROPRIETARY AND CONFIDENTIAL: THE DRAWINGS SPECIFICATIONS AND OTHER INFORMATION CONTAINED HEREIN IS THE SOLE PROPERTY OF HOLOGIC. ANY REPRODUCTION, IN PART OR AS A WHOLE, WHETHER FOR MANUFACTURE, SALE, OR OTHER PURPOSES, WITHOUT WRITTEN PERMISSION OF HOLOGIC IS STRICTLY PROHIBITED.

UNLESS OTHERWISE SPECIFIED
DO NOT SCALE DRAWING
THIRD ANGLE PROJECTION
DIMENSIONS ARE IN INCHES
INTERPRET DRAWING PER ASME Y14.5–2009
DIMENSIONAL TOLERANCES
TOLERANCES APPLY AS SHOWN BELOW
0 PLACE DEC ±.1 in
1 PLACE DEC ±0.015 in
2 PLACE DEC ±0.005 in
3 PLACE DEC ±0.005 in
4 PLACE DEC ±0.0050 in
SURFACE FINISH: 125µ in
FRACTIONS: ±1/64 in
REMOVE ALL BURRS AND SHARP EDGES
EQUIVALENT TO R .005 MAX
AND CHAMFER FIRST THREAD
COMMERCIAL TOLERANCES APPLY TO
STOCK SIZES

ENGINEER:	N. GANDHI	06/15/18
DRAWN BY:	N. GANDHI	06/15/18
REVISION RELEASE DATE		

MATERIAL: SEE PCB–01673 BOM

FINISH: N/A

HOLOGIC®

PROPOSED

DESCRIPTION: ASSY. RFID INTERFACE BD.

SIZE: D | NUMBER: AD–05989 | REV: 001

SCALE: NTS | SHEET: 1 OF 1

ENG–0034–T30 REV. 003