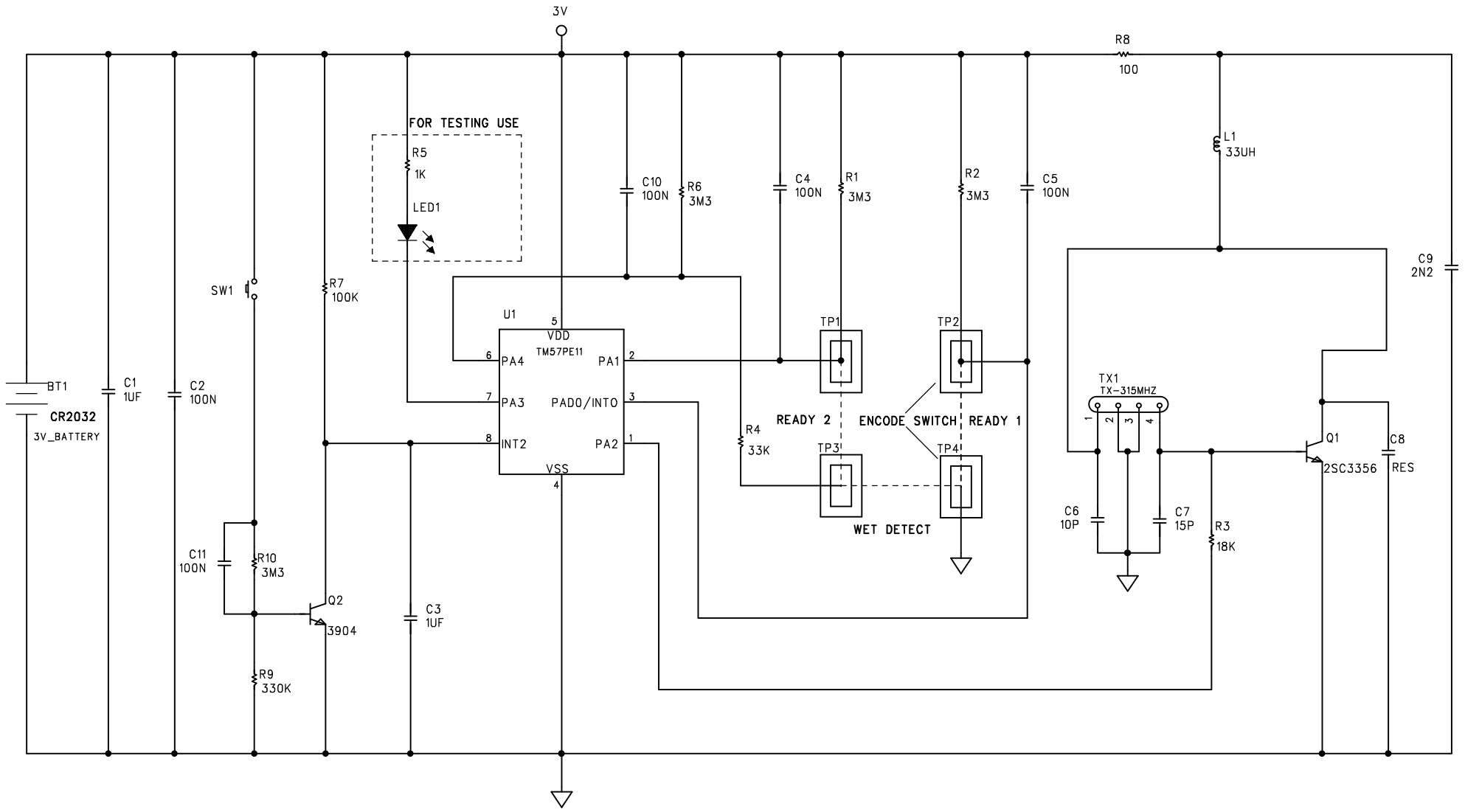

CKICOM	
TITLE:	T-210 TRANSMITTER BOARD V01
DRAWING NO:	1 OF 1 PCB #2
DRAWN BY DATE:	MING 20100713
APPROVED BY: DATE:	