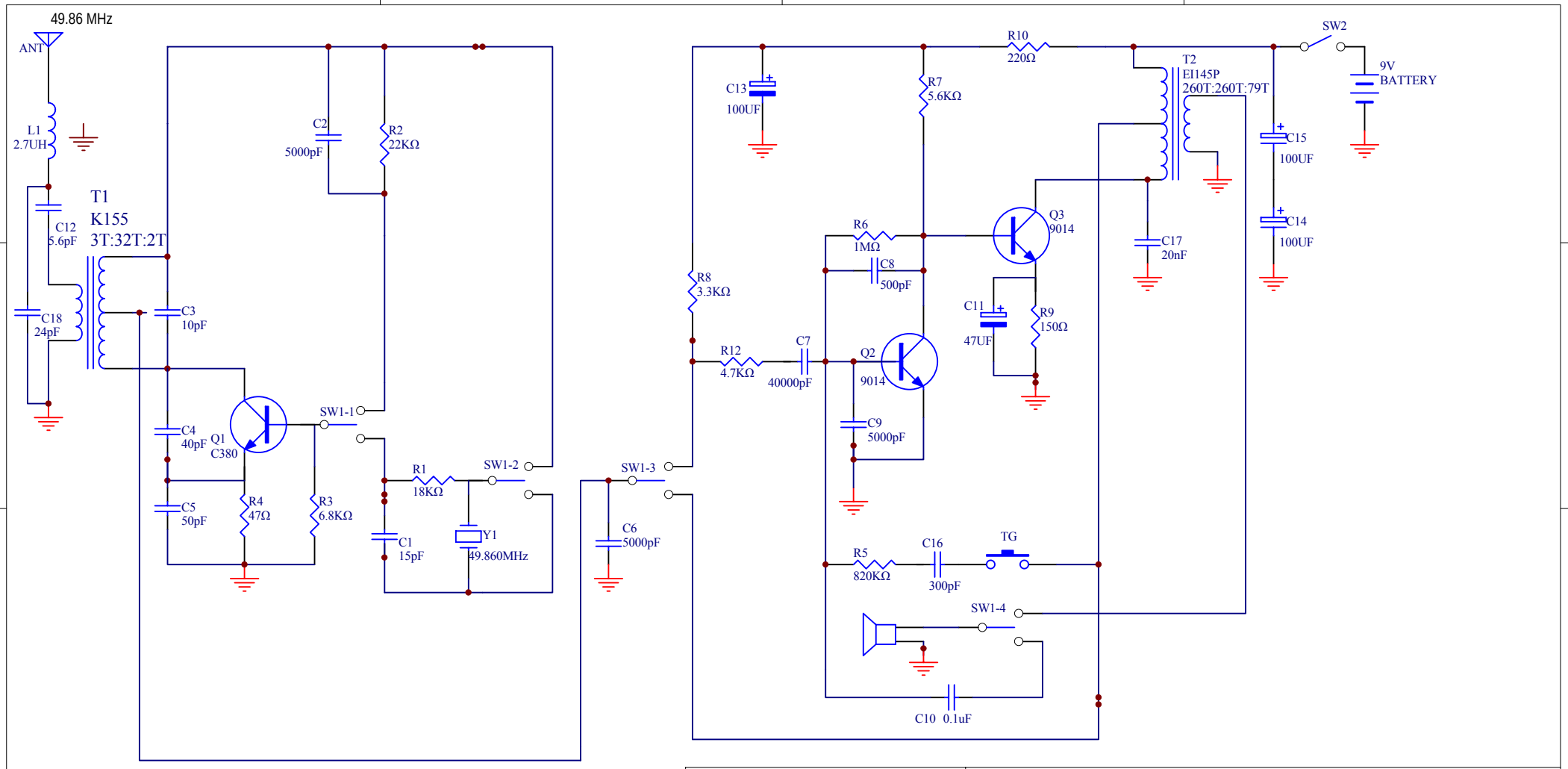

65410

SONIC WALKIE TALKIE

Size	FCSM No.	DWG No.	Rev
A4			

Scale		Sheet
		0 of 0