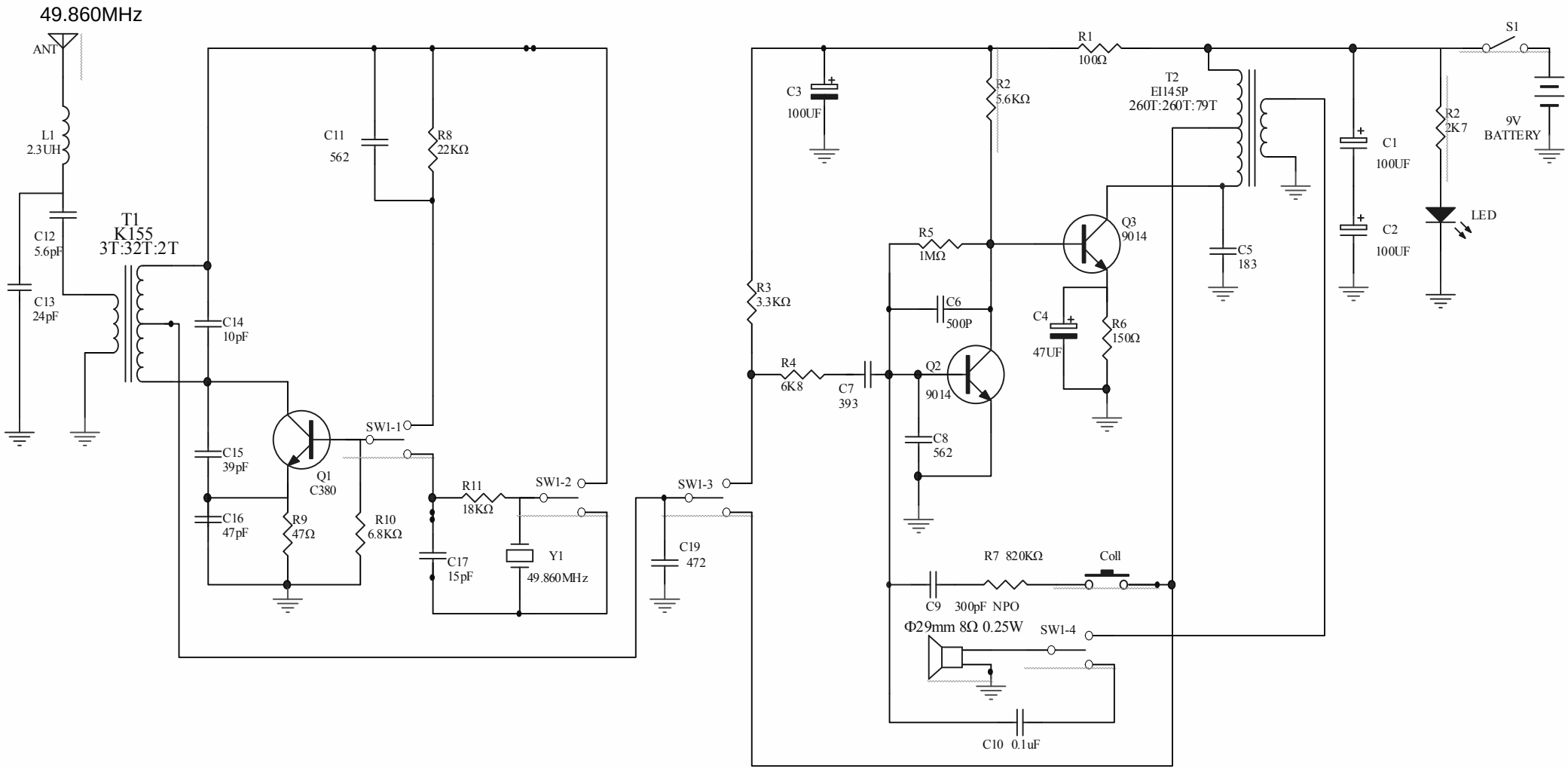

38060 Walkie Talkies

Size	FCSM No.	DWG No.	Rev
A4			
Scale		Sheet	