Quick Start Guide
English

The use and operation of navigation systems

Attention! Don't operate with the device while driving. Even the smallest and shortest distractions from road or traffic for you and other road users - even at slow speeds – may have devastating consequences.
Type in the destination before starting your journey and start the navigation system before you start driving.
If you have to change the route or the settings while driving, you should better stop for it.

After switching on the device it could take a few moments to find the required minimum number of navigation satellites. Depending on the environment, it may go faster or longer. Under the open sky, it is the fastest. In inner cities with narrow streets and tall buildings, this process may take longer, because the "view to the sky" is very narrow and that cause reflections of the satellite signals. In the forest it may also take longer because of the crowns of leaves. In tunnels, buildings, etc. the system does not work! As soon as you are positioned under the open sky the connections to the satellites will be established as quickly as possible.
The map data is up to date in time of production of your navigation system. Nevertheless, it may happen that you may have long-known streets, paths, house numbers, roundabouts, etc. are not included. This is not a fault, but due to the fact that streets are changing. Your device is using Open Street Map (OSM). This is in our opinion the most useful map for cyclists. OSM is a non-profit web-based collaborative project to create a free map of the world. We like this idea and we support it.

Updates and Enhancements

You can download the detailed manual from our website:

www.teasi.eu

For software and map updates, please download our TEASI Tool for free, also from www.teasi.eu.

Appearance

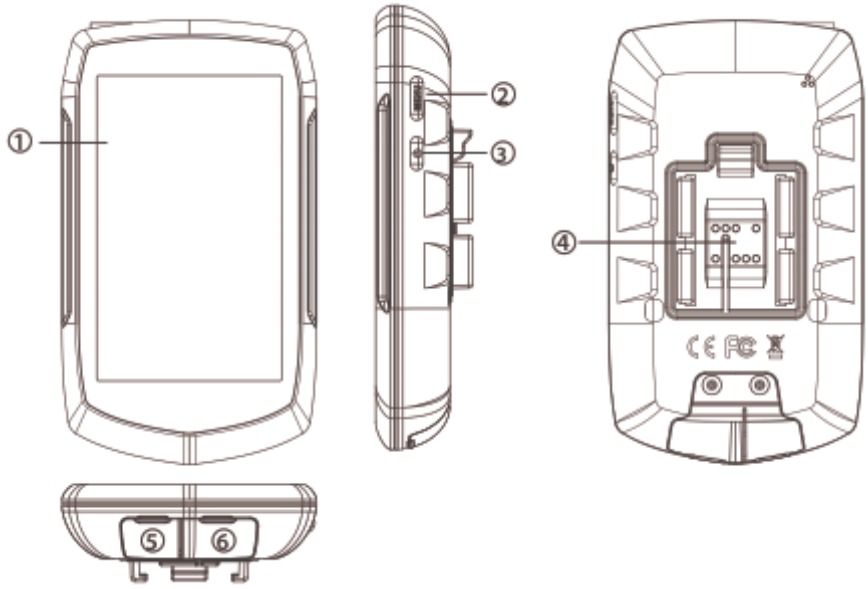

1. Touch-Display	**2. Menu button**
3. Power button (On / Off)	**4. Golden contacts for connecting cradle and E-bike**
5. USB slot	**6. SD card slot**

1 Discovering the program

1.1 Main menu

You can select: Map, Coputer, Memory, Fitness, Search, Plan, and Settings
After initialization the main menu appears.

Note: depending on your model, the display may vary.

1.2 Map

In map mode you can see where you are, follow navigation instructions, save your current position as a favorite, record your trip, or search for addresses and venues nearby.

1.3 Destination

In the Destination menu you can select where to navigate, based on the type of your target location.

Note: Some Fields might require a navigation or a record of a trip in progress to display real values.

1.4 TEASI Plan (feat. Altitude graph)

TEASI Tour is our groundbreaking feature to untie your hand by letting trips to be created on-the-go!
Tap to add new points to your track, remove points if needed, save your track for further use when finished, and navigate to it with the go button.

1.5 Memory

Memory is responsible to show you your recorded and imported trips, and favorites.
You can call up all your saved data and statistics via this submenu.
Memory can be conveniently managed on a **PC** or **MAC** via the TEASI-Tool.

1.6 Fitness

You can create your own trainings based on Distance, Speed, Time, or Calories.

1.7 Computer

Computer menu is responsible for showing the data and information about your trip.
The content of the information box can be changed by tapping on it.

Note: Some Fields might require a navigation or a record of a trip in progress to display real values.

1.8 Settings

The Settings menu is for adjusting and fine-tuning your device.
You can

- select the display mode of maps,
- enable and configure POI display
- manage your accounts,
- change language,
- adjust sound settings,
- get information about the product,
- set backlight strength and timer,
- set date ,time, and time zone
- select between Easy mode and Full mode(chapter 3)
- clean up unnecessary maps to gain free space
- calibrate your Display

2 The First Startup sequence

When the device is first switched on, or after a factory reset it is necessary to set up some required information.

2.1 Language & EULA

Select the desired language, then read and agree the End-User License Agreement (EULA).

2.2 Profile

Set up a profile or multiple profiles in order to customize the device to your needs. Tap on every detail to set it.

2.3 Date & Time

It is possible to set the date and time by GPS, or manually. If "GPS" mode is selected, only the format and time zone can be set.
If manual settings are chosen, you can also change the date and the time.

3 Easy mode – Full mode

The easy mode appears in a compact layout with the essential features of the Teasi software, which makes the device simpler and more effective to operate.

The full mode, in which all the functions are activated, can be re-enabled through settings – system menu.

4 Mounting the holder on your bicycle

Check with local laws about area of installation restrictions

Do not mount close to any shifters or other objects which could inhibit operation and safety of your bicycle.

Userinformation/Contact

If your device has a defect or you have problems with it, please contact our Service & Support Centre.
If you need to send your device to us, please attend to the following points:

1. Whenever possible, use the original packaging.
2. Add a detailed error description
3. Add your full name and address and a copy of your purchase receipt.
4. Stamp and send the package to us (sufficient postage).

Address of our Service Center:
First Service Center, Kleine Düwelstr. 21, DE-30171 Hannover

You can call also our **hotline**: +49 (0)511 – 123 835 06 or send a **Fax**: +49 (0) 511-161 25 36 or an **eMail:** support@first-servicecenter.de

Declaration of Conformity

Hereby Baros GmbH, declares, that the device TEASI volt, is in compliance with the essential requirements and other relevant regulations of Directive 1999/5/EC.

The Declaration of Conformity can be found at: **www.a-rival.de**

Guarantee

Please keep the proof of purchase for this device for the entire duration of the guarantee period, as it must be produced in the event of any claim.
You (as the end user) receive a 24 month guarantee from the date of sale. The article has been manufactured using the most modern production methods and subjected to strict quality controls.
Please contact only the manufacturer (not the dealer where you purchased it) in the event of any defects during the guarantee period.

Hotline: +49 (0)5 11-123 835 06 / **eMail:** support@first-servicecenter.de

The guarantee does not cover damage caused by improper use or external influence (water, falling, sunlight, breakage or impact).

Wireless capabilities :

Our product (GPS) can test the heart rate through Bluetooth, GPS need to pairing with Heart rate belt, When human touch the sensor of GPS and the machine can matching on heart rate belt and show the heart rate information at the same time.

Heart rate belt

FCC Certification Requirements

Caution: Any changes or modifications in construction of this device which are not expressly approved by the party responsible for compliance could void the user's authority to operate the equipment.

This device complies with part 15 of the FCC Rules. Operation is subject to the following two conditions: (1) This device may not cause harmful interference, and

(2) This device must accept any interference received, including interference that may cause undesired operation.

The manufacturer is not responsible for any radio or TV interference caused by unauthorized modifications to this equipment. Such modifications could void the user's authority to operate the equipment.

This equipment has been tested and found to comply with the limits for a Class B digital device, pursuant to Part 15 of the FCC Rules. These limits are designed to provide reasonable protection against harmful interference in a residential installation. This equipment generates, uses and can radiate radio frequency energy and, if not installed and used in accordance with the instructions, may cause harmful interference to radio communications. However, there is no guarantee that interference will not occur in a particular installation. If this equipment does cause harmful interference to radio or television reception, which can be determined by turning the equipment off and on, the user is encouraged to try to correct the interference by one or more of the following measures:

-- Reorient or relocate the receiving antenna.

-- Increase the separation between the equipment and receiver.

-- Connect the equipment into an outlet on a circuit different from that to which the receiver is connected.

-- Consult the dealer or an experienced radio/TV technician for help.