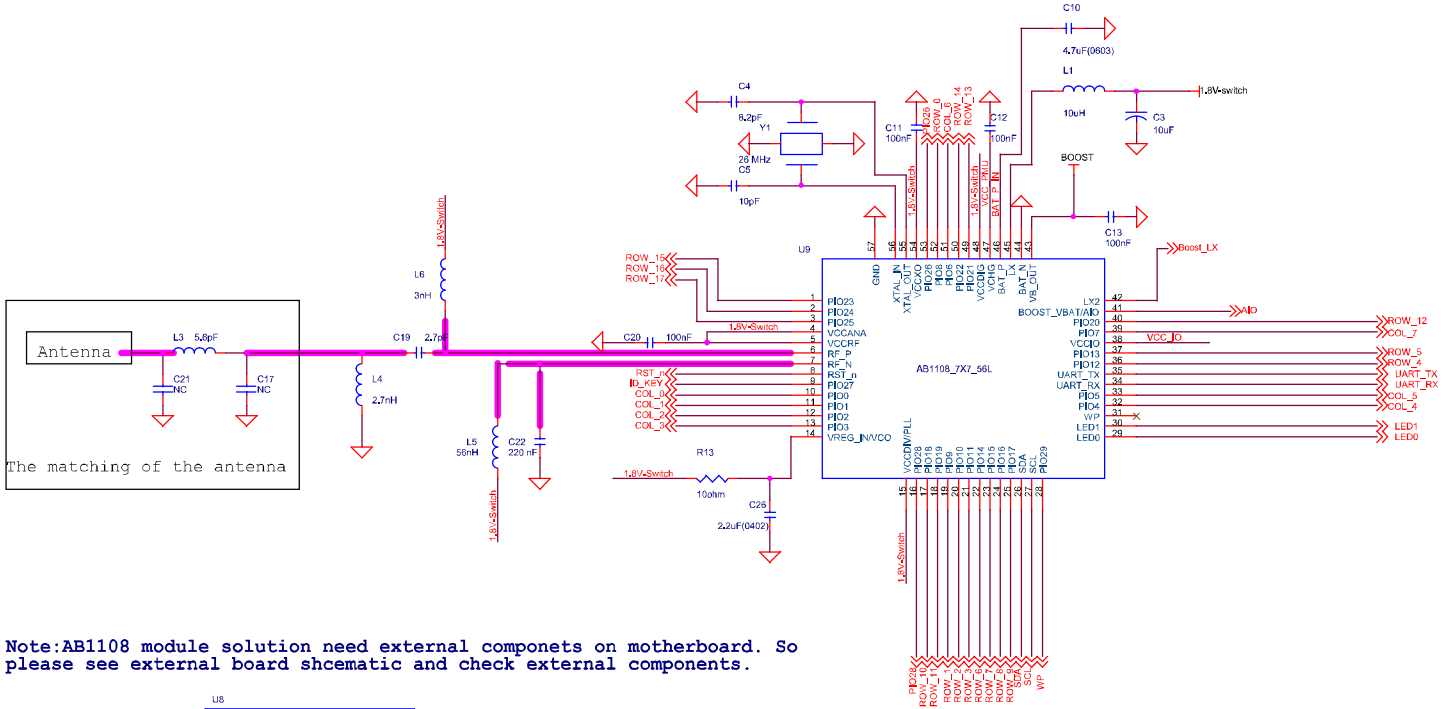

Note:AB1108 module solution need external componets on motherboard. So please see external board shcematic and check external components.

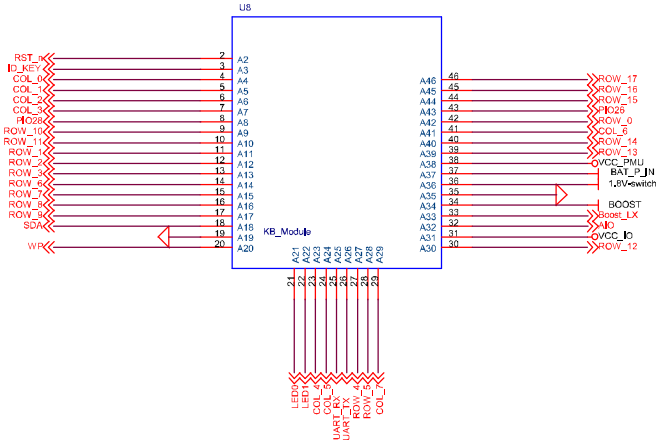

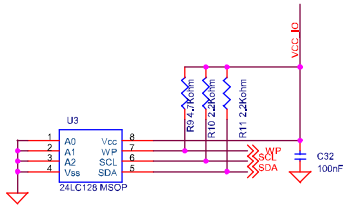

Note:AB1108 module solution needs external componets on motherboard.
So please see external board shcematic and check external components.

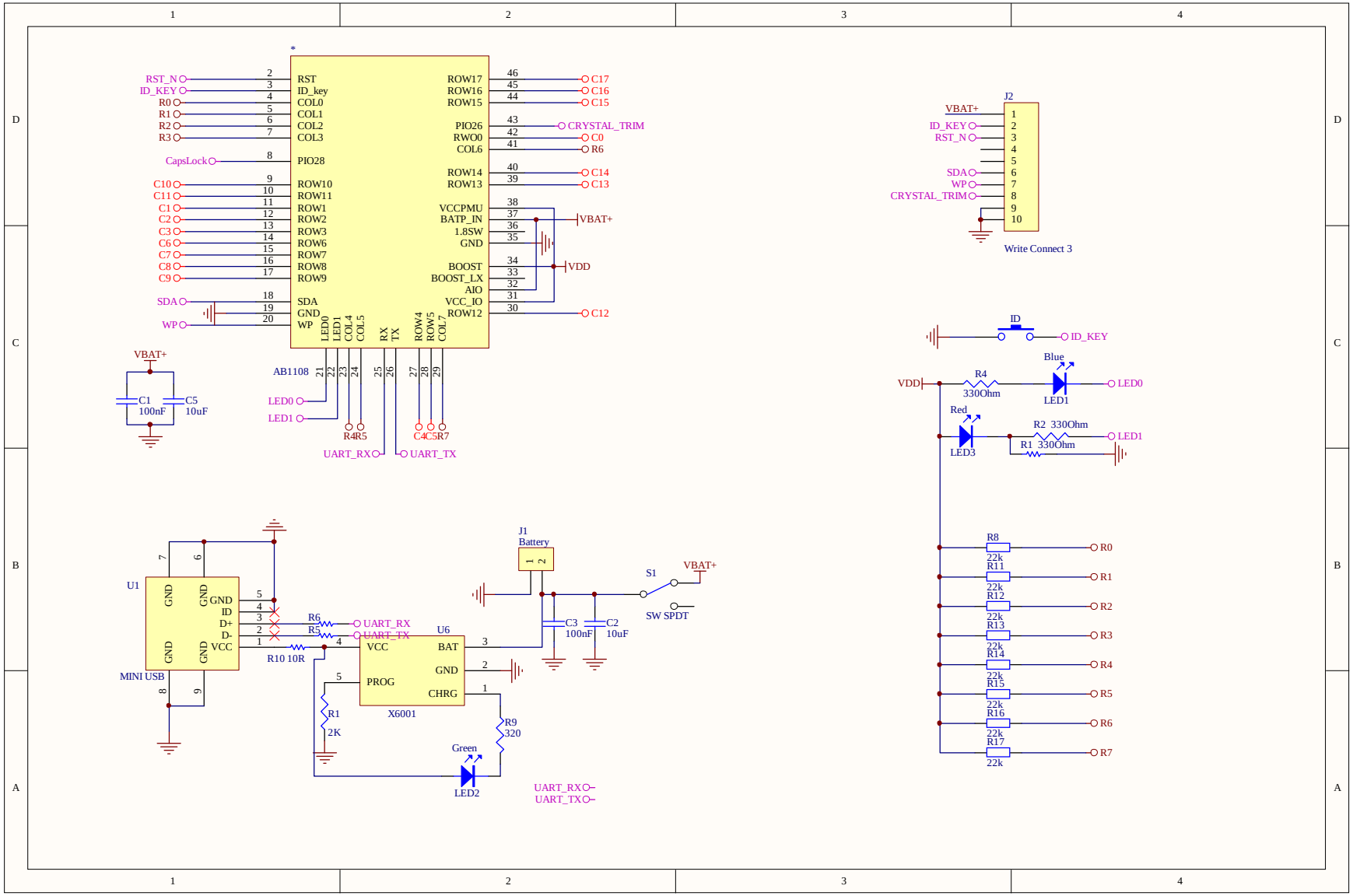
AB1108
RST_N
ID_KEY
R0
R1
R2
R3
CapsLock
C10
C11
C1
C2
C3
C6
C7
C8
C9
SDA
WP
RST
ID_key
COL0
COL1
COL2
COL3
PIO28
ROW10
ROW11
ROW1
ROW2
ROW3
ROW6
ROW7
ROW8
ROW9
SDA
GND
WP
LED0
LED1
COL4
COL5
RX
TX
ROW4
ROW5
COL7
ROW17
ROW16
ROW15
PIO26
RWO0
COL6
ROW14
ROW13
VCCPMU
BATP_IN
1.8SW
GND
BOOST
BOOST_LX
AIO
VCC_IO
ROW12
C17
C16
C15
CRYSTAL_TRIM
C0
R6
C14
C13
VBAT+
VDD
C12
VBAT+
C1
100nF
C5
10uF
LED0
LED1
R4R5
C4C5R7
UART_RX
UART_TX
J2
VBAT+
ID_KEY
RST_N
SDA
WP
CRYSTAL_TRIM
Write Connect 3
ID
ID_KEY
VDD
R4
330Ohm
Blue
LED1
LED0
Red
LED3
R2 330Ohm
R1 330Ohm
LED1
R8
22k
R11
22k
R12
22k
R13
22k
R14
22k
R15
22k
R16
22k
R17
22k
R0
R1
R2
R3
R4
R5
R6
R7
U1
GND
GND
GND
GND
ID
D+
D-
VCC
MINI USB
R6
R5
UART_RX
UART_TX
R10 10R
U6
VCC
PROG
BAT
GND
CHRG
X6001
R1
2K
R9
320
Green
LED2
UART_RX
UART_TX
J1
Battery
C3
100nF
C2
10uF
S1
VBAT+
SW SPDT