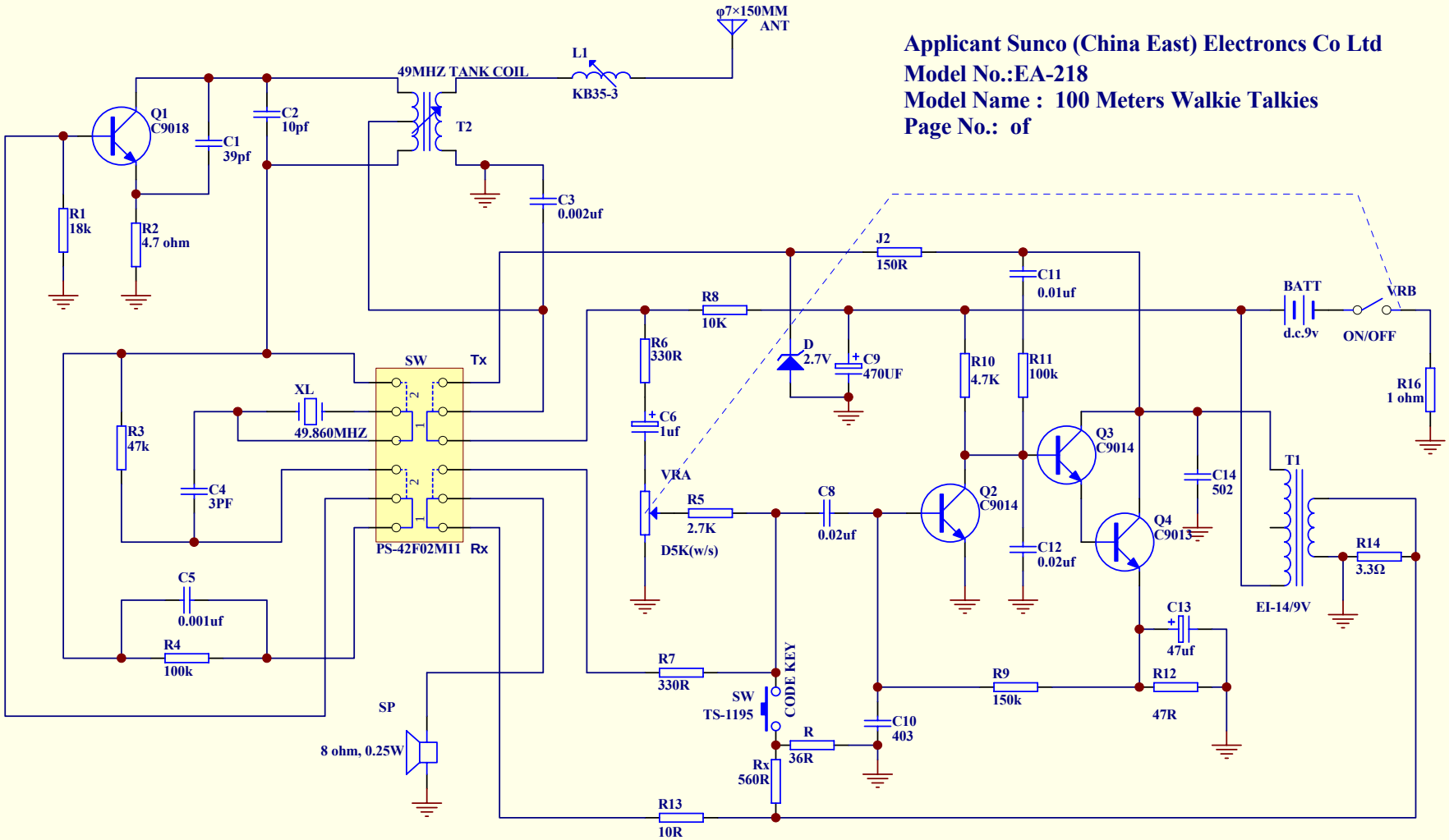
Applicant Sunco (China East) Electroncs Co Ltd
Model No.:EA-218
Model Name : 100 Meters Walkie Talkies
Page No.: of
φ7×150MM
ANT
L1
KB35-3
49MHZ TANK COIL
T2
Q1
C9018
C1
39pf
C2
10pf
C3
0.002uf
R1
18k
R2
4.7 ohm
J2
150R
C11
0.01uf
BATT
d.c.9v
VRB
ON/OFF
R8
10K
R6
330R
D
2.7V
C9
470UF
R10
4.7K
R11
100k
R16
1 ohm
SW
Tx
XL
49.860MHZ
C6
1uf
Q3
C9014
R3
47k
C4
3PF
VRA
R5
2.7K
C8
0.02uf
Q2
C9014
C14
502
T1
Q4
C9013
D5K(w/s)
C12
0.02uf
R14
3.3Ω
PS-42F02M11
Rx
C5
0.001uf
EI-14/9V
C13
47uf
R4
100k
R7
330R
R9
150k
R12
47R
SW
TS-1195
CODE KEY
SP
8 ohm, 0.25W
R
36R
C10
403
Rx
560R
R13
10R