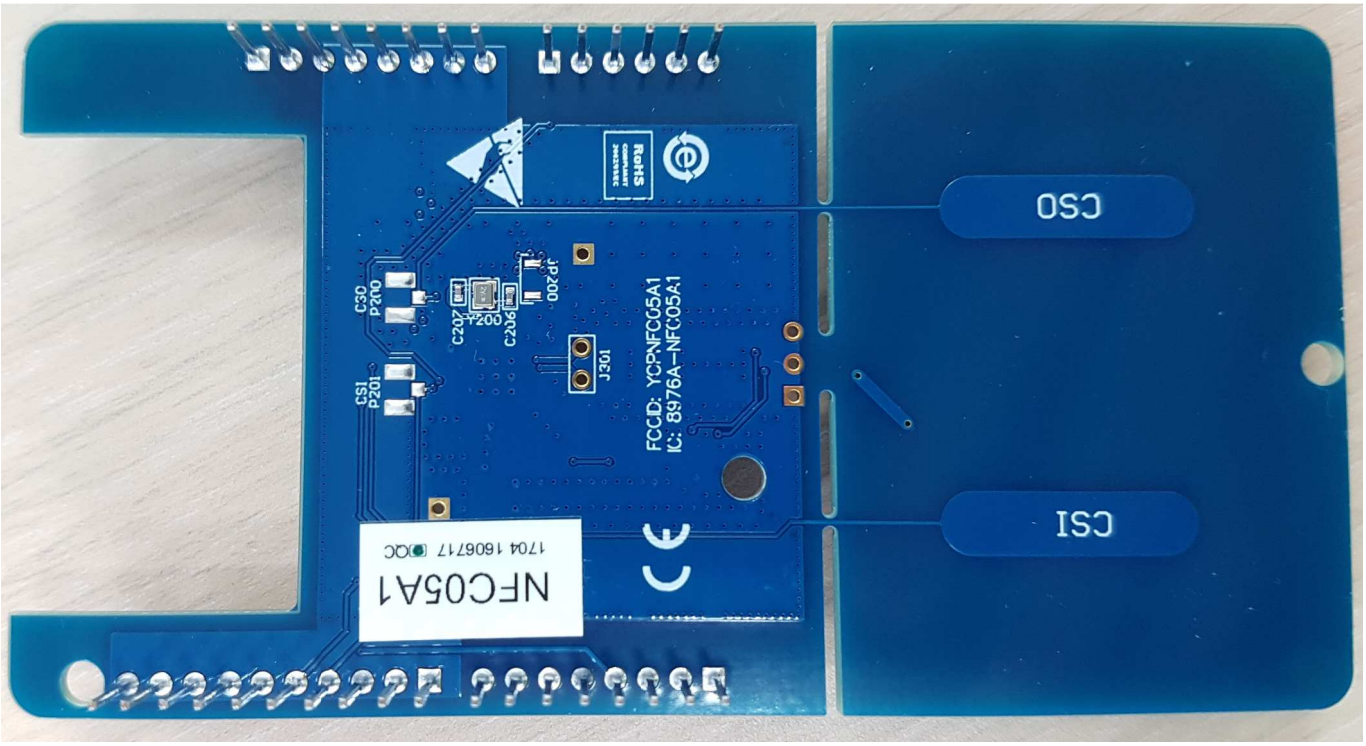
CSI
CSO
FCCID: YCPNFC05A1
IC: 8976A-NFC05A1
NFC05A1
1704 16067 17

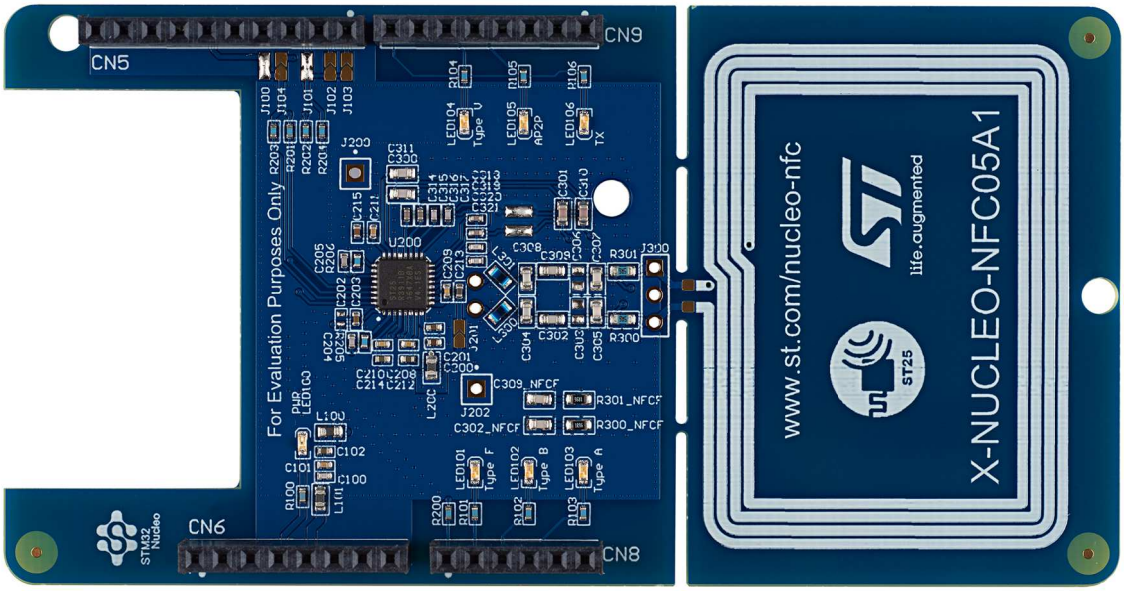
CN5
CN9
CN6
CN8
For Evaluation Purposes Only
www.st.com/nucleo-nfc
life.augmented
ST25
X-NUCLEO-NFC05A1

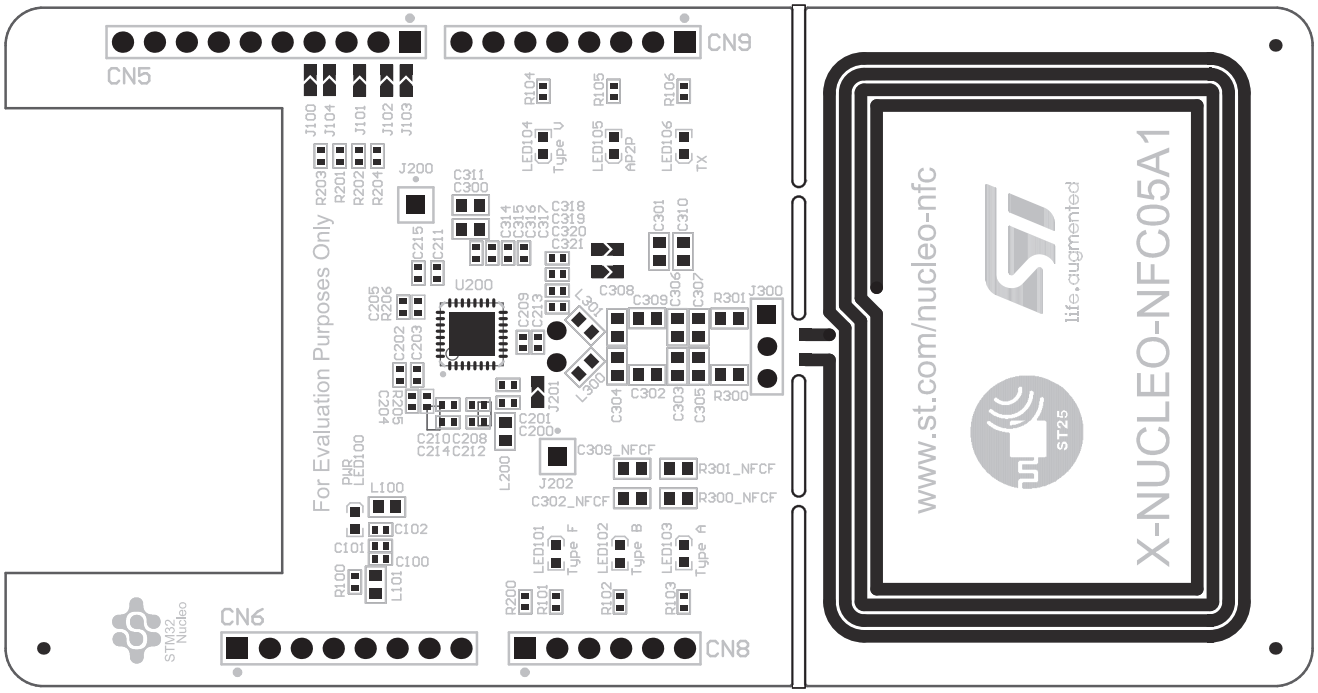
CN5
CN9
CN6
CN8
For Evaluation Purposes Only
STM32 Nucleo
www.st.com/nucleo-nfc
X-NUCLEO-NFC05A1
life.augmented
ST25

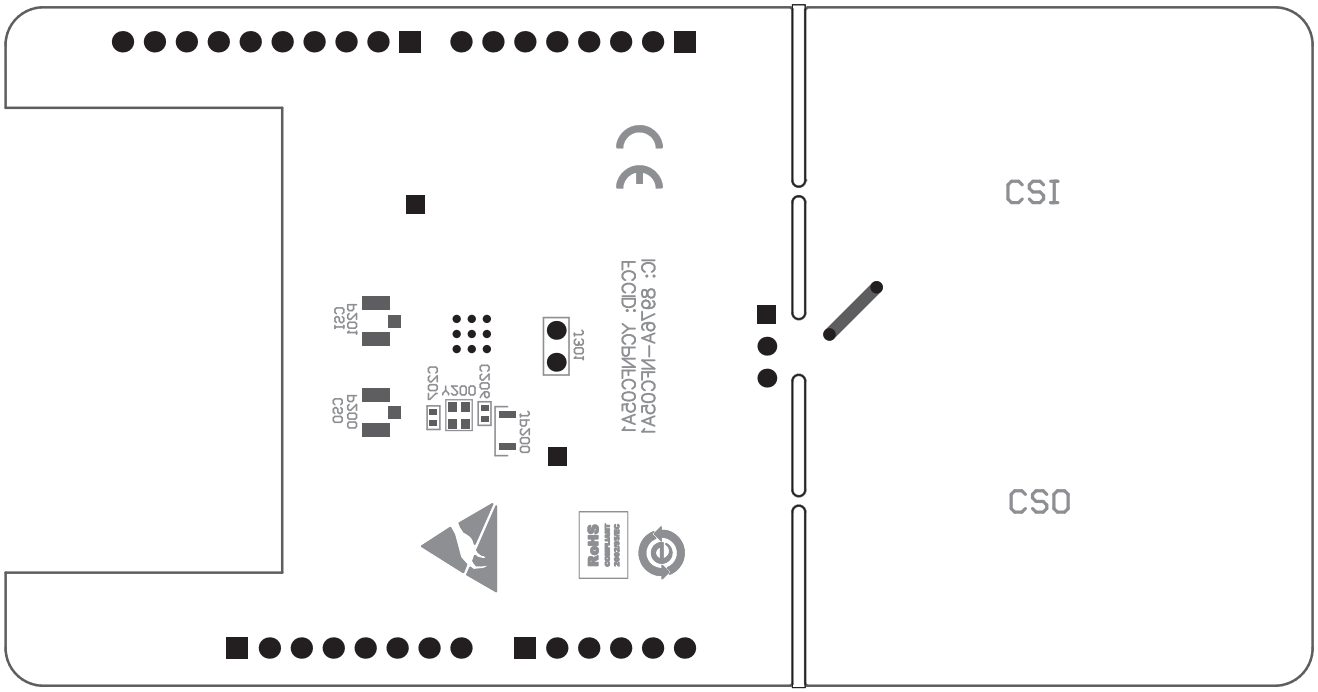
CSI
CSO