6 Schematics
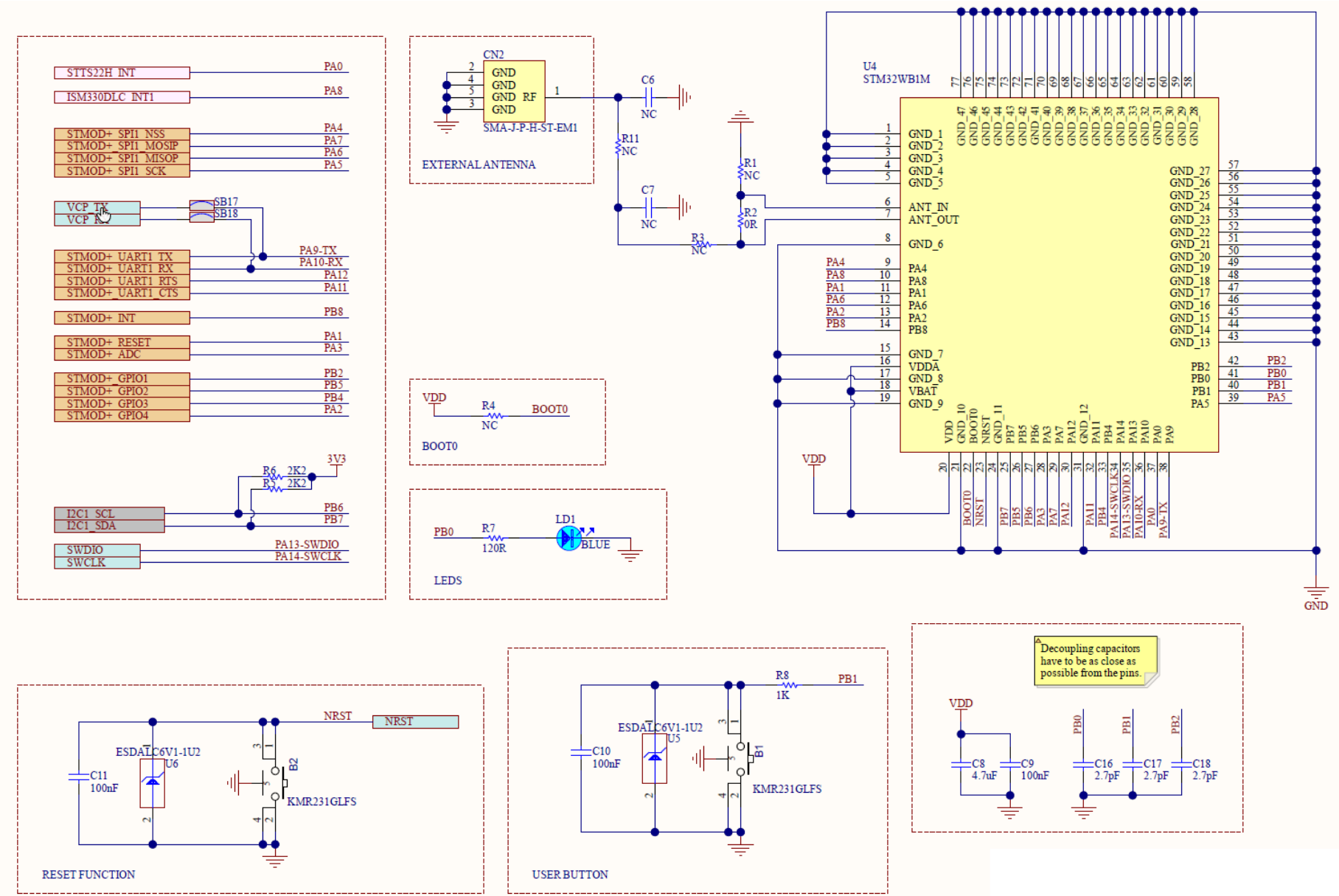
Figure 5. Reference board schematics