MODIFICATION			
VER.	DESCRIPTION	DATE	ENGINEER
R00	Release	09/16'15	

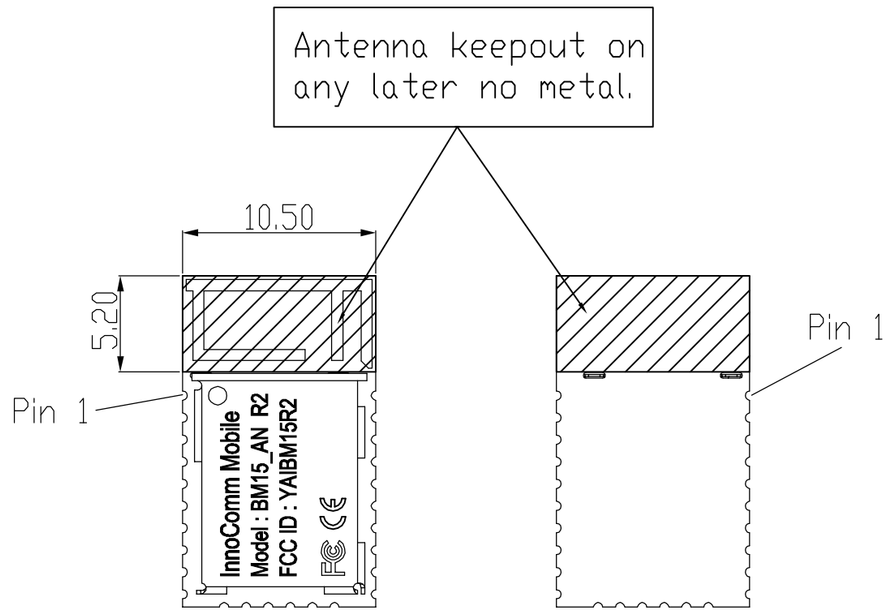

TOP VIEW

BOTTOM VIEW

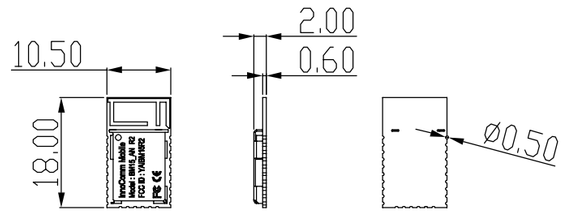

SCALE 1:1

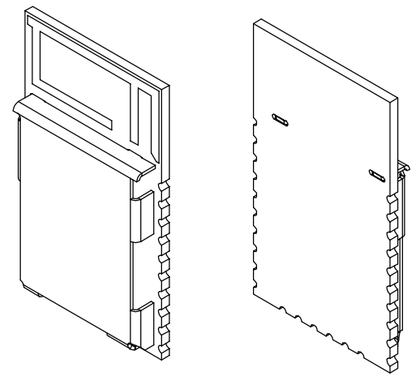

3D View

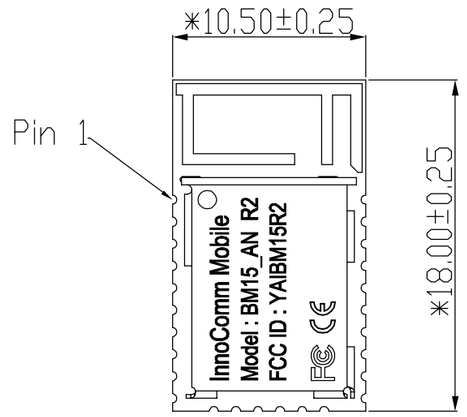

TOP VIEW

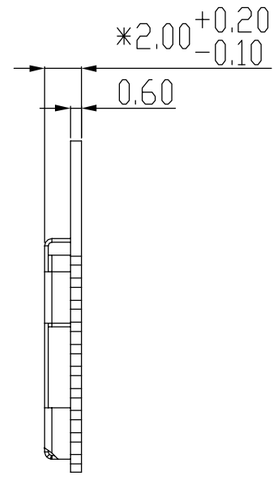

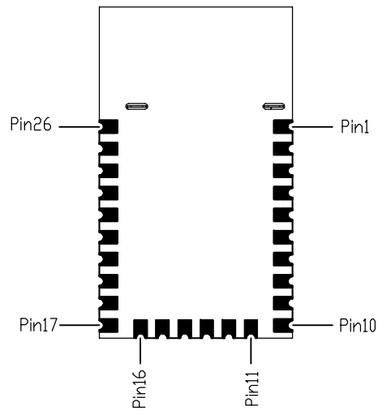

BOTTOM VIEW

SCALE 3:1

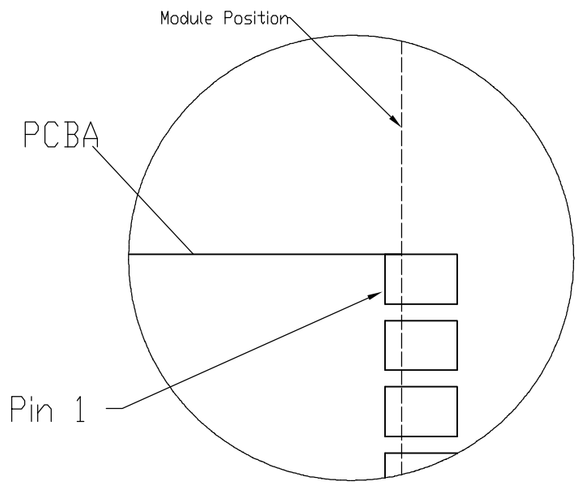

DETAIL B

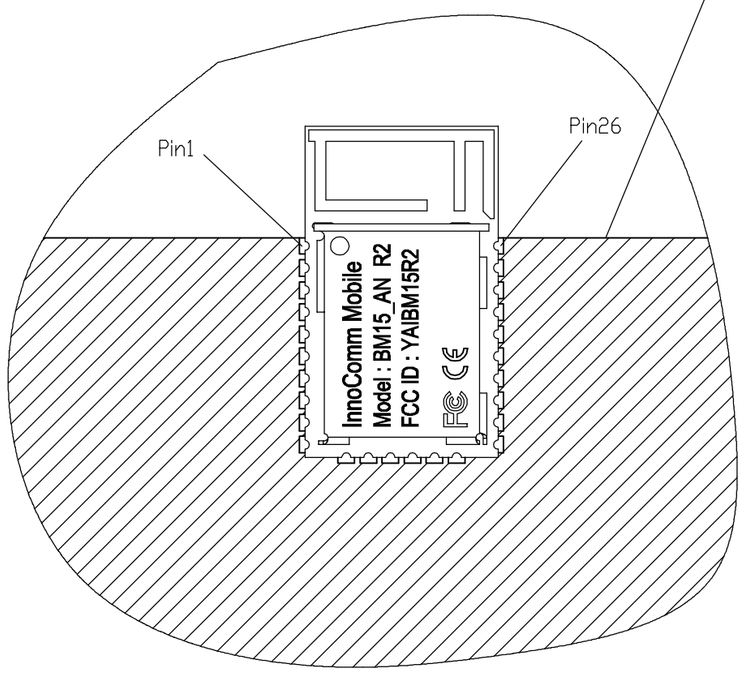

TOP VIEW

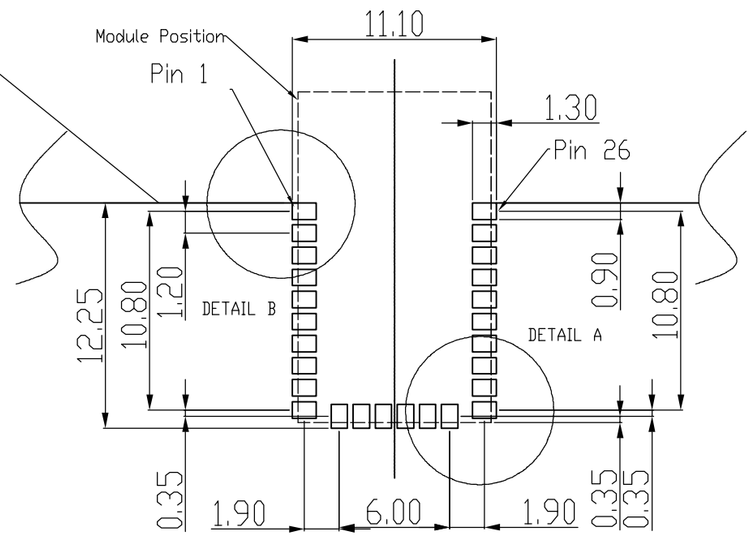

RECOMMENDED P.C.B PATTERN LAYOUT

SCALE 3:1

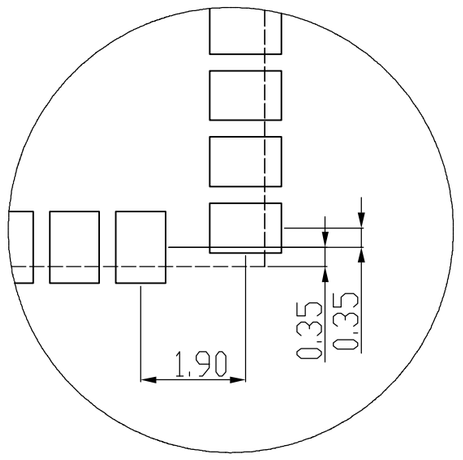

DETAIL A

InnoComm Moblie Technology Corp.

THESE DRAWINGS AND SPECIFICATIONS ARE THE PROPERTY OF INNOCOMM MOBILE TECHNOLOGY CORP. AND SHALL NOT BE REPRODUCED OR USED AS THE BASIS FOR THE MANUFACTURE OR DEVICES WITHOUT PERMISSION.

DIMENSIONAL TOLERNACES±	M1	M2	S1	S2	P1	P2	C
0~6	0.05	0.10	0.15	0.20	0.05	0.10	0.5
6~30	0.10	0.20	0.15	0.25	0.10	0.15	1.0
30~80	0.15	0.25	0.20	0.30	0.20	0.40	2.0
80~180	0.15	0.30	0.25	0.45	0.40	0.80	3.0
180~315	0.20	0.50	0.40	0.60	0.60	1.20	3.0
315~800	0.30	0.80	0.70	1.10	0.80	1.50	4.0

SCALE 1.000 | UNITS MM | USED ON

Material:

Treatment:

THIRD ANGLE PROJECTION

A2 SIZE

Drawn:	Willey Lee
Designed:	Willey Lee
Checked:	
Approved:	
DWG TITAL:	BM15_AN_R2 DIM
DWG NO.:	XXX-XXXXX-XXXXX
REV.	
SHEET	1 OF 1

DWING NAME XXXXXXXXXXX | DWG NO. XXX-XXXXX-XXXXX | DATE