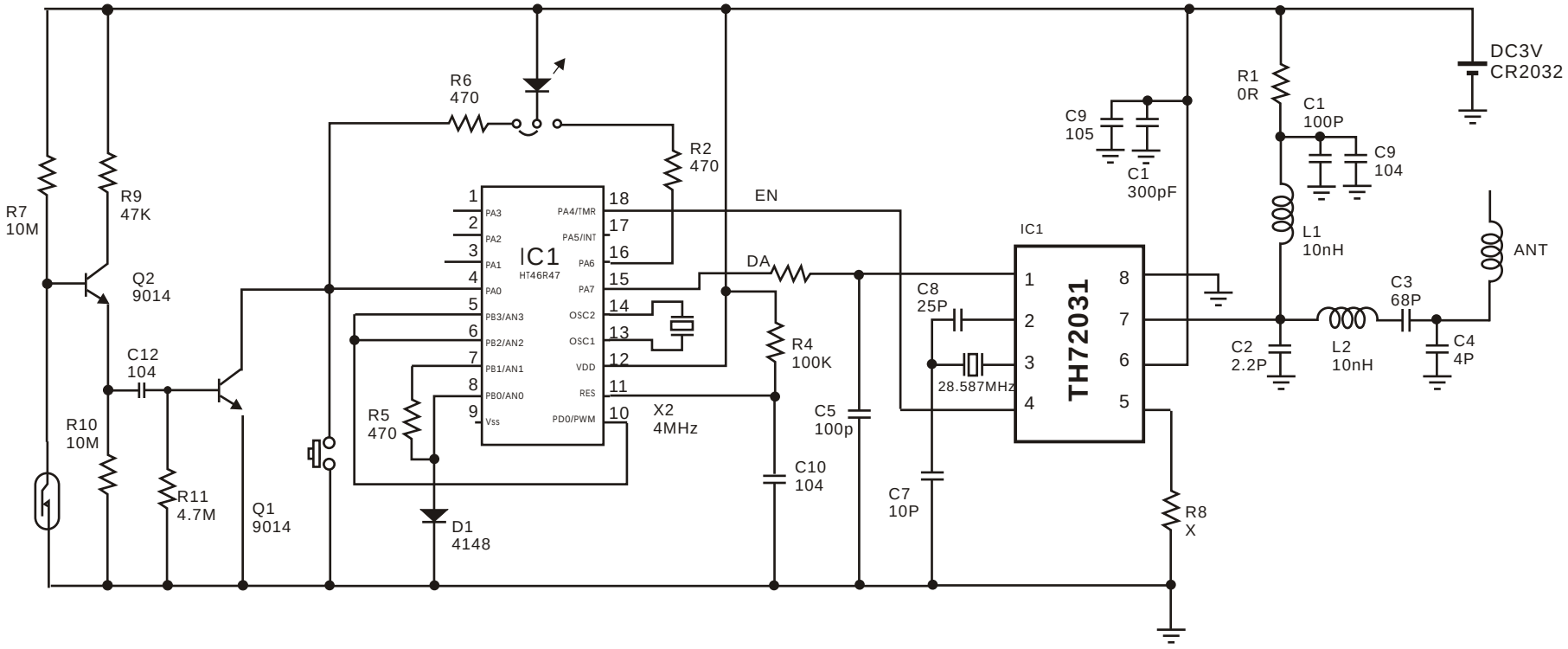

VENTURE GLOBAL LTD.	
CIRCUIT DIAGRAM	
DESCRIPTION : Wireless Door Chime (Transmitter)	
MODEL : DCX-800	
PCB NO. : PB-915	**REV. :**
DATE : 17/12/2009	**DRAW BY :** W.W. LIU