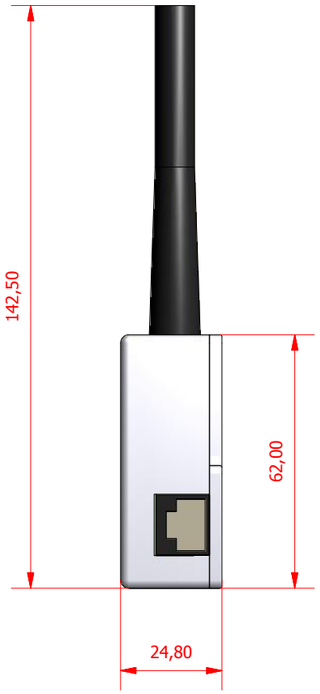

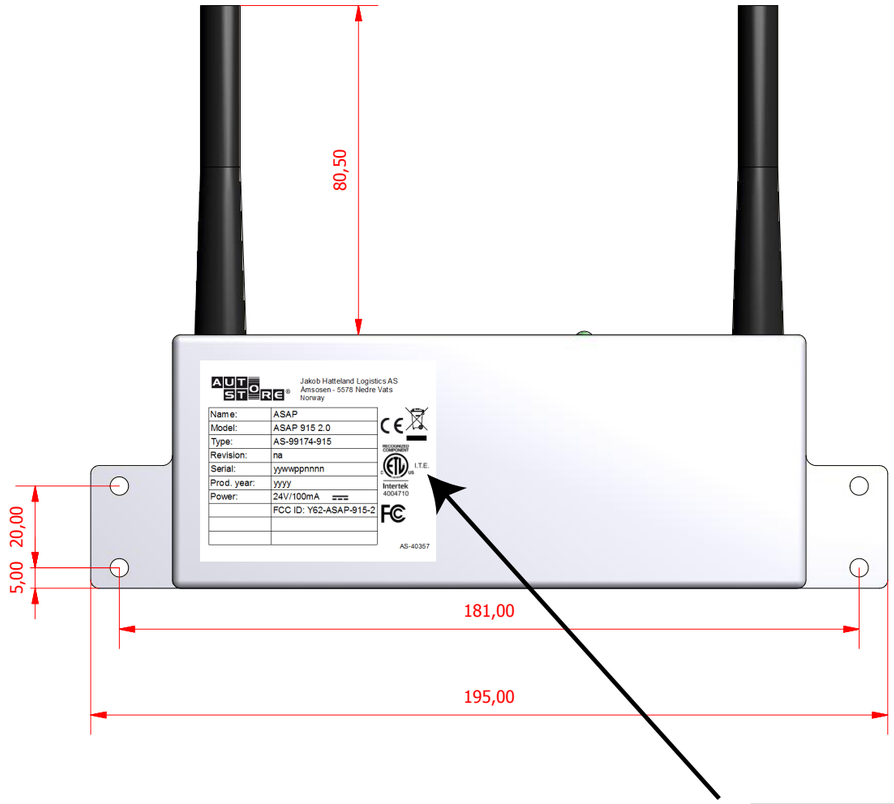

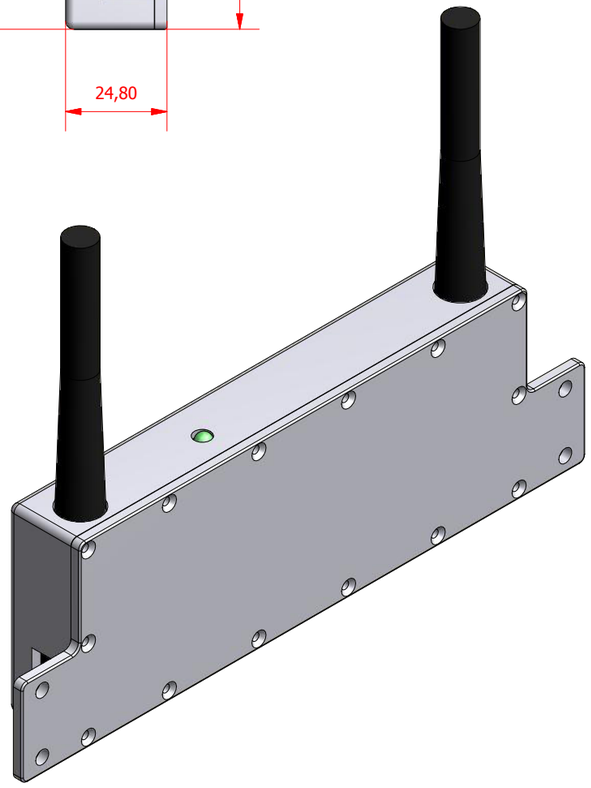

Jakob Hatteland Logistics AS
Åmsosen - 5578 Nedre Vats
Norway

Name:	ASAP
Model:	ASAP 915 2.0
Type:	AS-99174-915
Revision:	na
Serial:	yywwppnnnn
Prod. year:	yyyy
Power:	24V/100mA ⎓
	FCC ID: Y62-ASAP-915-2

RECOGNIZED COMPONENT
I.T.E.
Intertek
4004710

AS-40357

TOLERANCES FOR MACHINED PARTS:
For dimensions without tolerance indication use ISO 2768-f

TOLERANCES FOR SHEET METAL PARTS:

Size range 0-120:	± 0,20mm
Size range 120-1000:	± 0,30mm
Circular cutouts:	± 0,10mm
Dimensions in parenthesis:	± 0,50mm
Angular dimensions:	ISO 2768-f

Designed by	Designed date	Approved by:	Approved date:	Projection:	Sheet size
Geir Kõrge-Hårajuvet	**06.10.2010**				**A3**

Jakob Hatteland Logistics AS
5578 Nedre Vats - Norway

Description / Dimension

Material

According to international laws, this drawing is the property of **Jakob Hatteland Logistics AS**. The drawing and contents can not be made public, copied or otherwise used without written consept by **Jakob Hatteland Logistics AS**.

Filename
AS90195 ASAP 915MHz dual radio.idw

Revision

Sheet
1 / 1