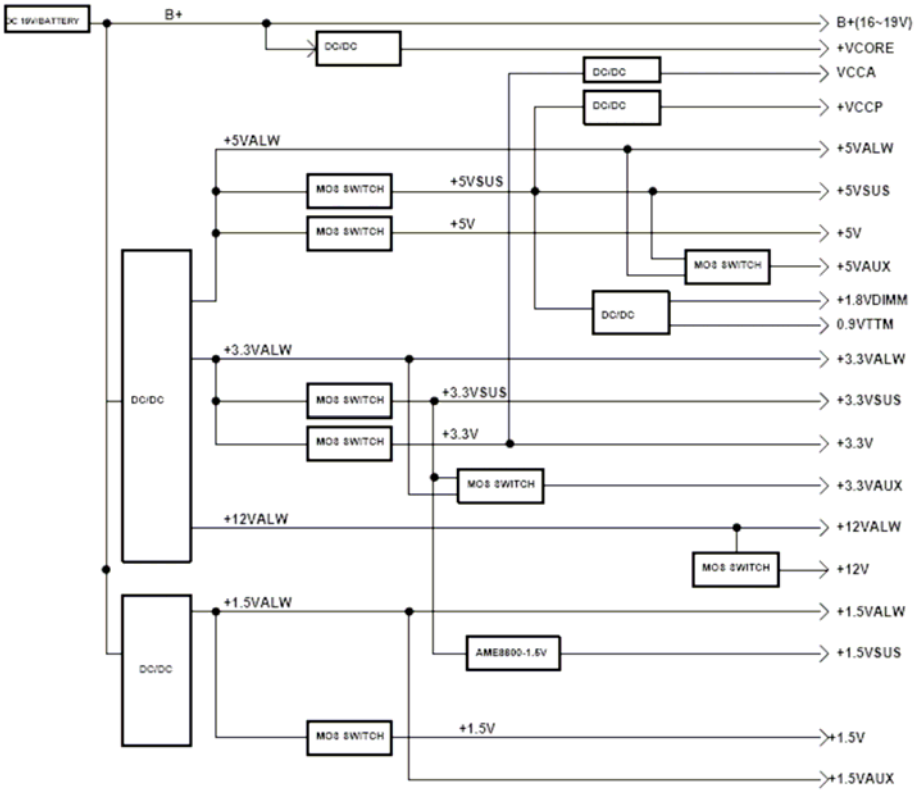
DC 19V/BATTERY
B+
DC/DC
B+(16~19V)
+VCORE
VCCA
+VCCP
+5VALW
MOS SWITCH
+5VSUS
+5V
+5VAUX
+1.8VDIMM
0.9VTTM
+3.3VALW
+3.3VSUS
+3.3V
+3.3VAUX
+12VALW
+12V
+1.5VALW
AME8800-1.5V
+1.5VSUS
+1.5V
+1.5VAUX

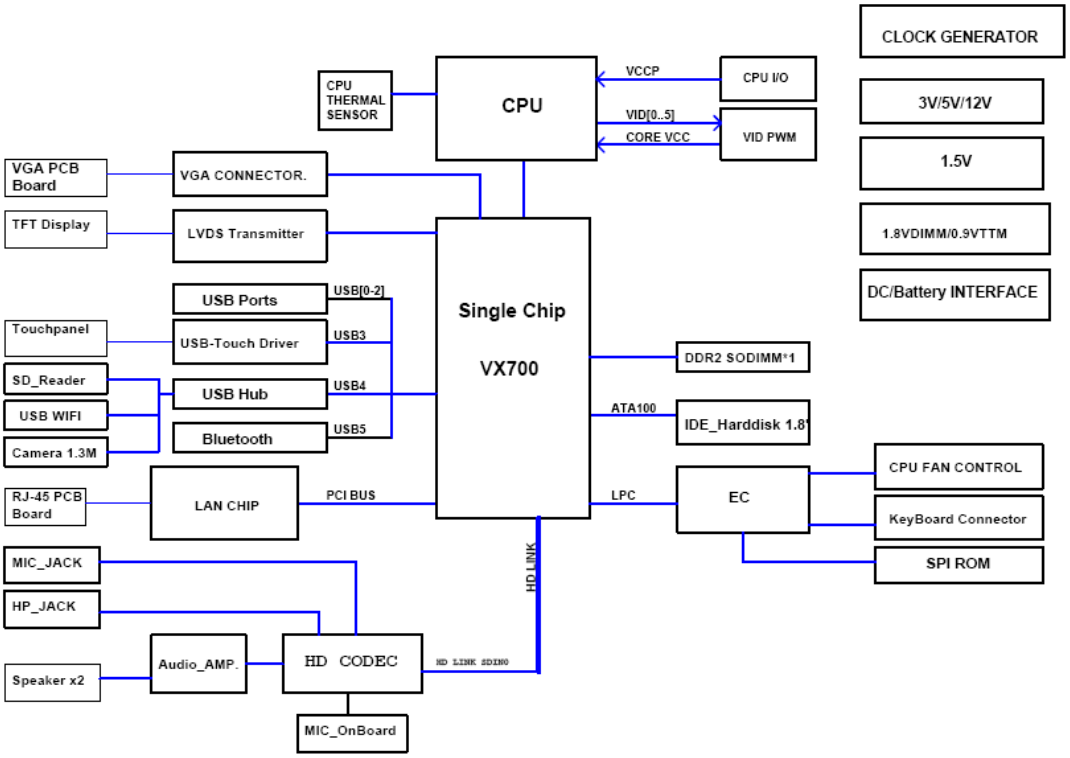
CLOCK GENERATOR
3V/5V/12V
1.5V
1.8VDIMM/0.9VTTM
DC/Battery INTERFACE
CPU THERMAL SENSOR
CPU
VCCP
CPU I/O
VID[0..5]
CORE VCC
VID PWM
VGA PCB Board
VGA CONNECTOR.
TFT Display
LVDS Transmitter
Single Chip
VX700
USB Ports
USB[0-2]
Touchpanel
USB-Touch Driver
USB3
SD_Reader
USB Hub
USB4
USB WIFI
Bluetooth
USB5
Camera 1.3M
DDR2 SODIMM*1
ATA100
IDE_Harddisk 1.8"
RJ-45 PCB Board
LAN CHIP
PCI BUS
LPC
EC
CPU FAN CONTROL
KeyBoard Connector
SPI ROM
HD LINK
MIC_JACK
HP_JACK
Speaker x2
Audio_AMP.
HD CODEC
HD LINK SDIN0
MIC_OnBoard

Bluetooth:

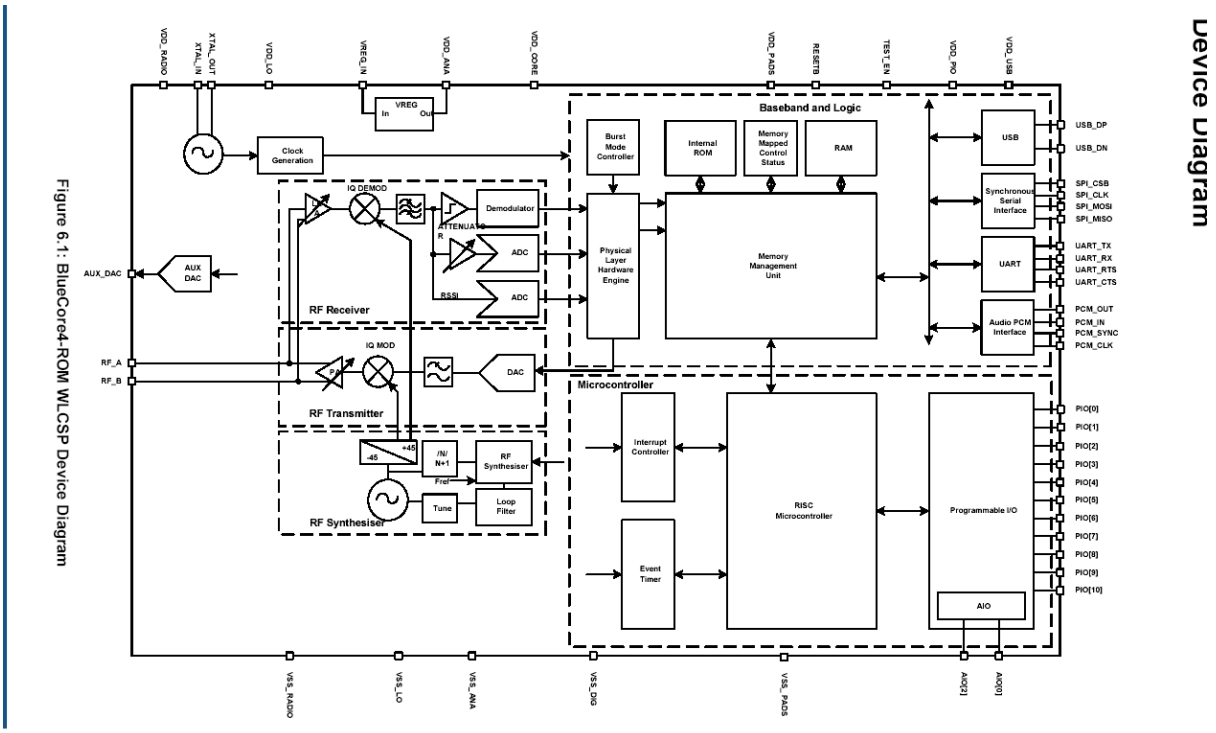

Figure 6.1: BlueCore4-ROM WLCSP Device Diagram

.
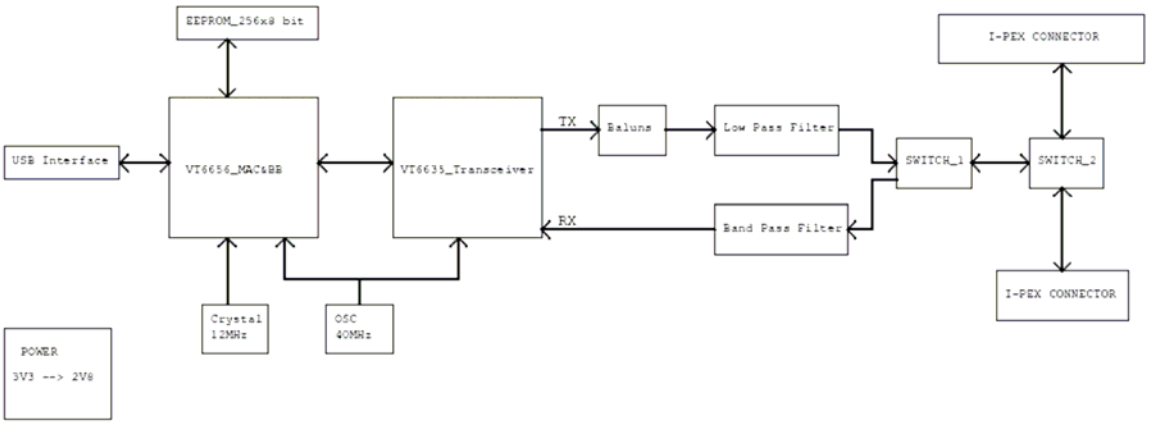
WIFI: