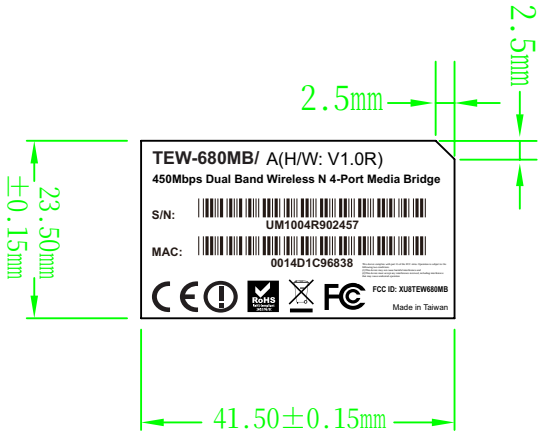
2.5mm
2.5mm
TEW-680MB/ A(H/W: V1.0R)
450Mbps Dual Band Wireless N 4-Port Media Bridge
S/N:
UM1004R902457
MAC:
0014D1C96838
FCC ID: XU8TEW680MB
Made in Taiwan
23.50mm
±0.15mm
41.50±0.15mm

Label Location