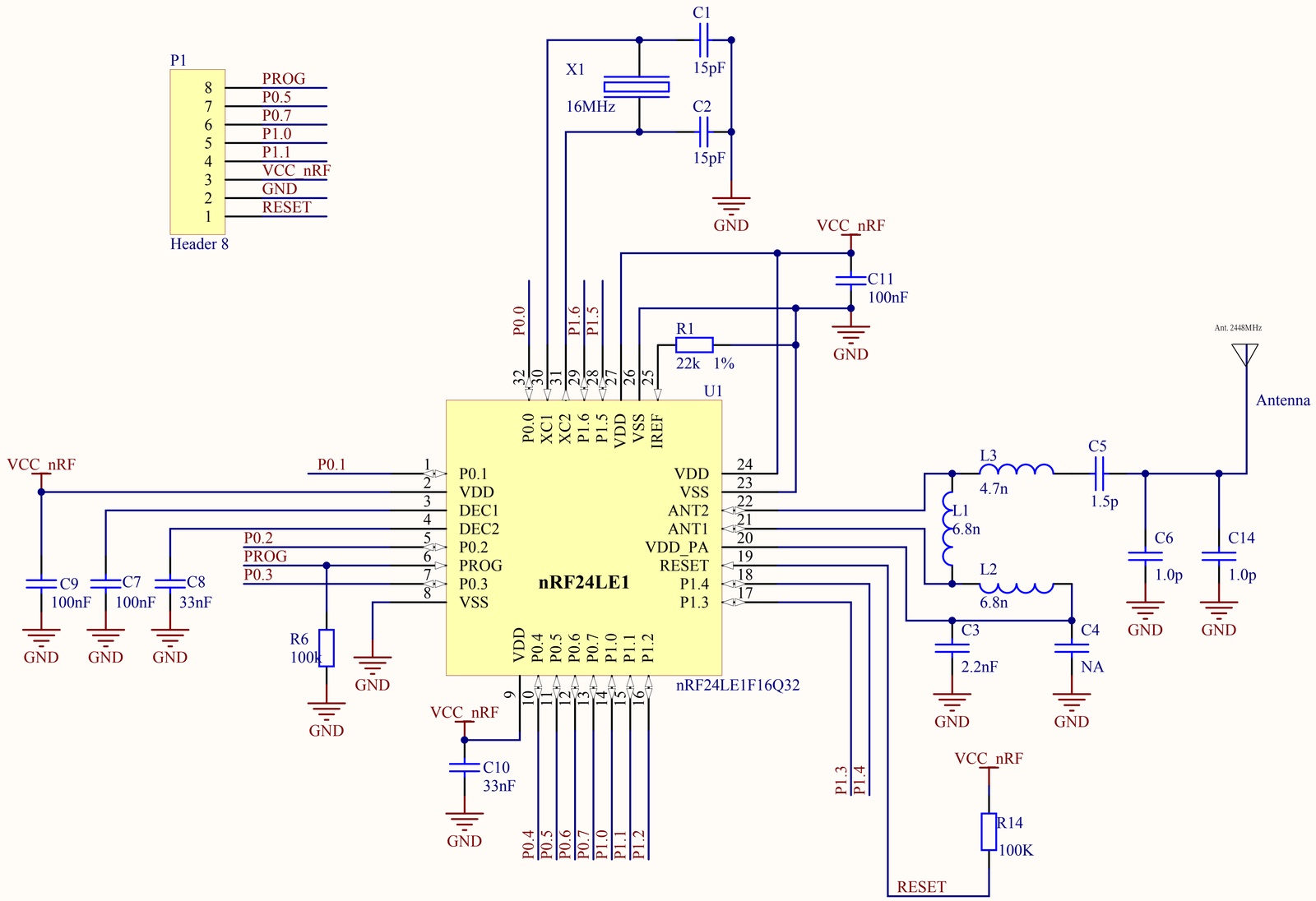

Title		
Size	Project Number 2	Revision 1.3
Date: 15/9/2009		Sheet 1 of 1
File:		Drawn By: