Polymer Li-ion
Rechargeable Battery
BP85A
850mAh 3.7V
Caution
Made in China

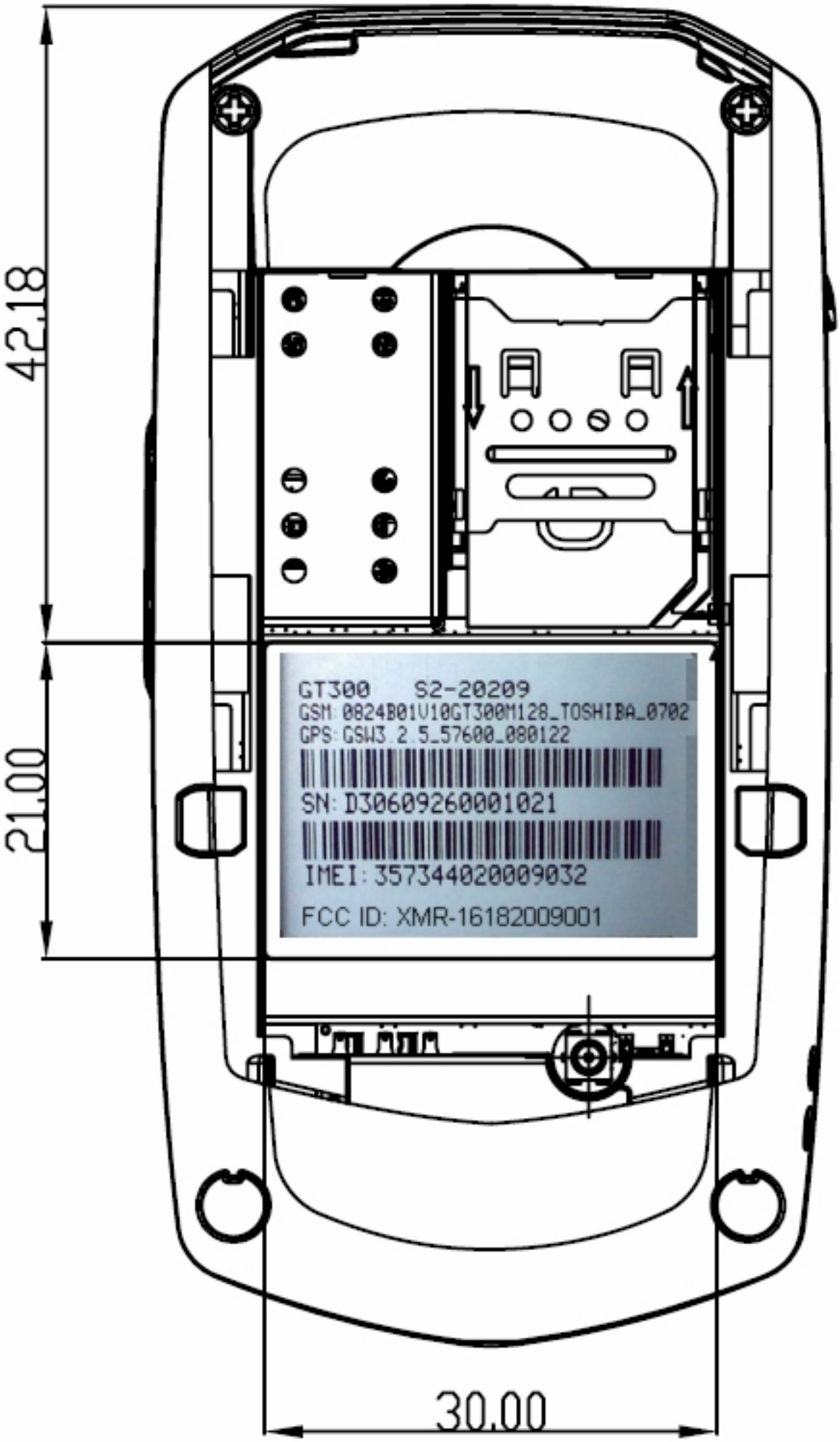
42.18
21.00
30.00
GT300 S2-20209
GSM: 0824B01V10GT300M128_TOSHIBA_0702
GPS: GSW3.2.5_57600_080122
SN: D30609260001021
IMEI: 357344020009032
FCC ID: XMR-16182009001