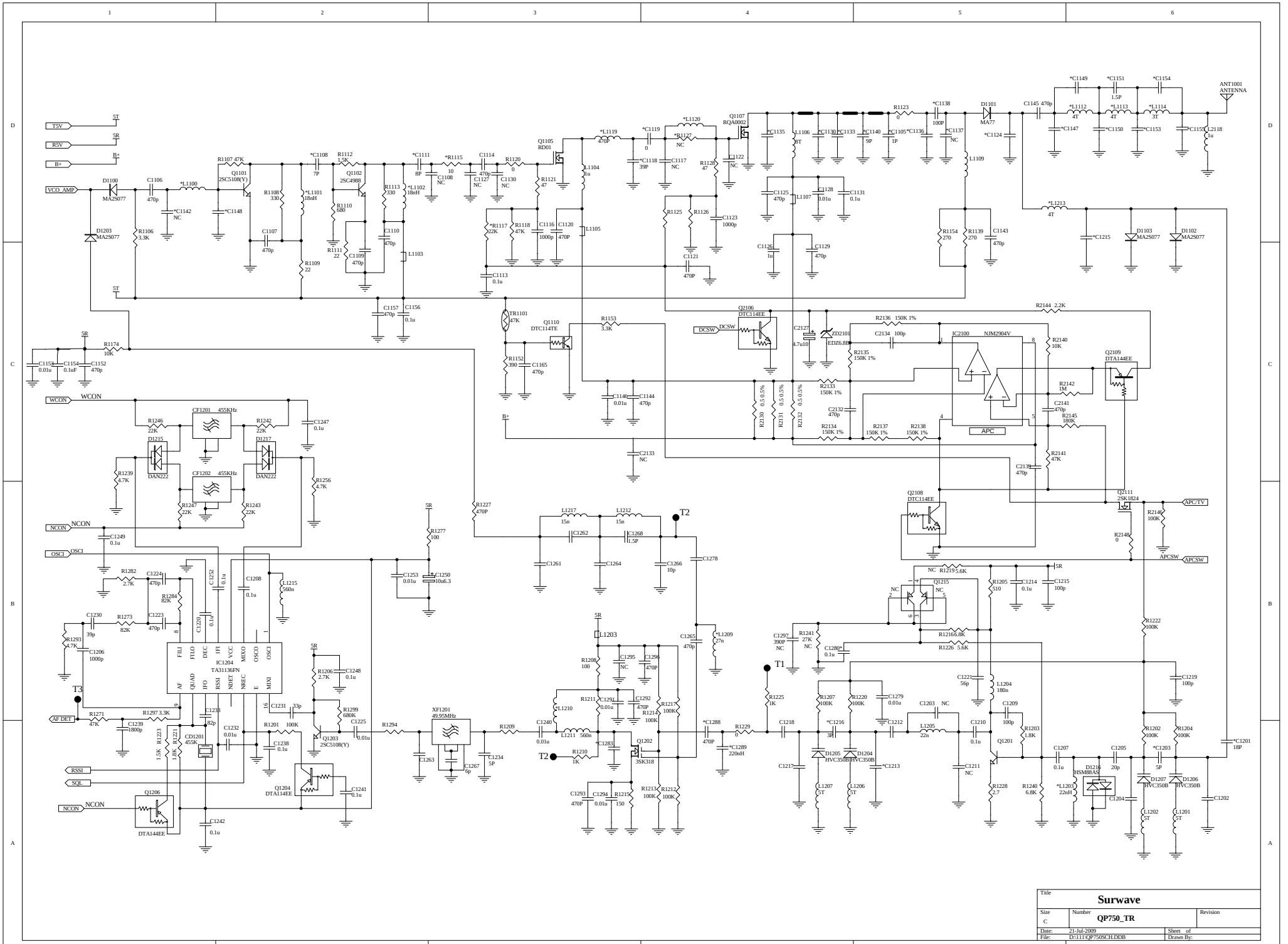

Title		
Surwave		
Size: C	Number: **QP750_TR**	Revision
Date: 21-Jul-2009		Sheet of
File: D:\111\QP750SCH.DDB		Drawn By:

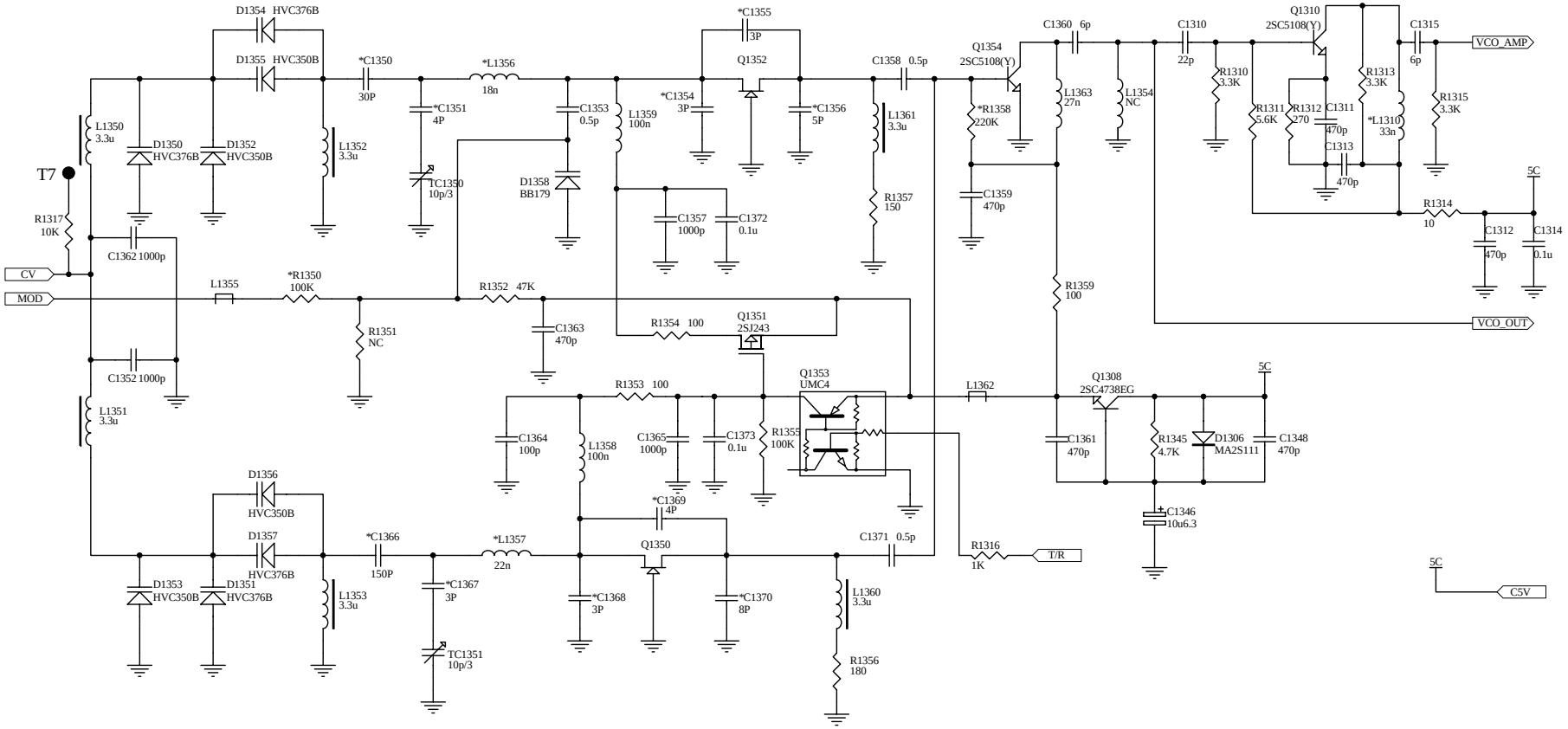

Title		
Surwave		
Size: B	Number: **QP750_VCO**	Revision: V00
Date: 21-Jul-2009	Sheet 2 of 6	
File: D:\111\QP750SCH.DDB	Drawn By:	

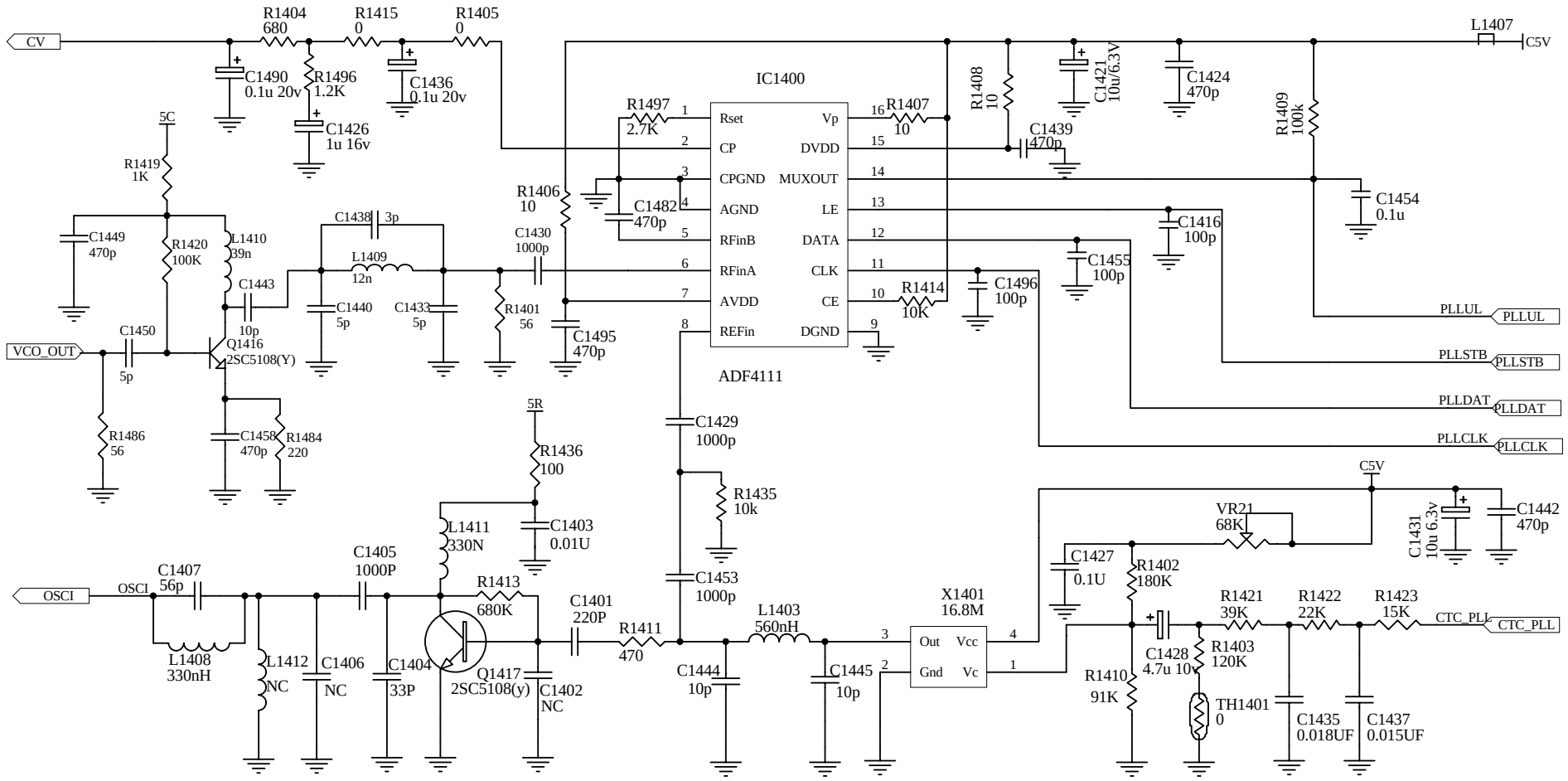

Title		
Surwave		
Size: A4	Number: **QP750_PLL**	Revision: V00
Date: 21-Jul-2009		Sheet 3 of 6
File: D:\111\QP750SCH.DDB		Drawn By:

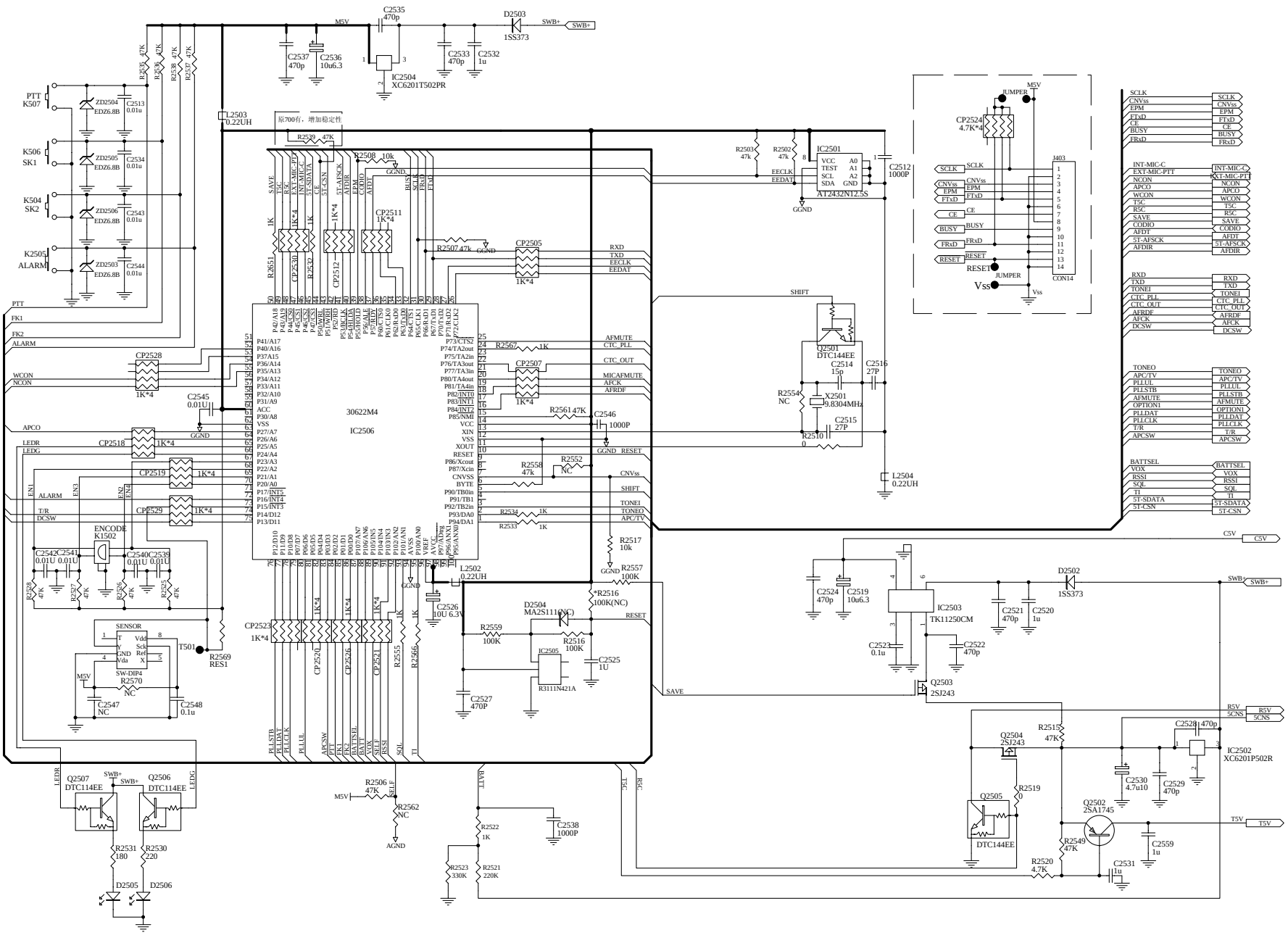

Title		
Surwave		
Size: A2	Number: **QP750_MCU**	Revision:
Date: 21-Jul-2009	Sheet of	
File: D:\111\QP750SCH.DDB	Drawn By:	

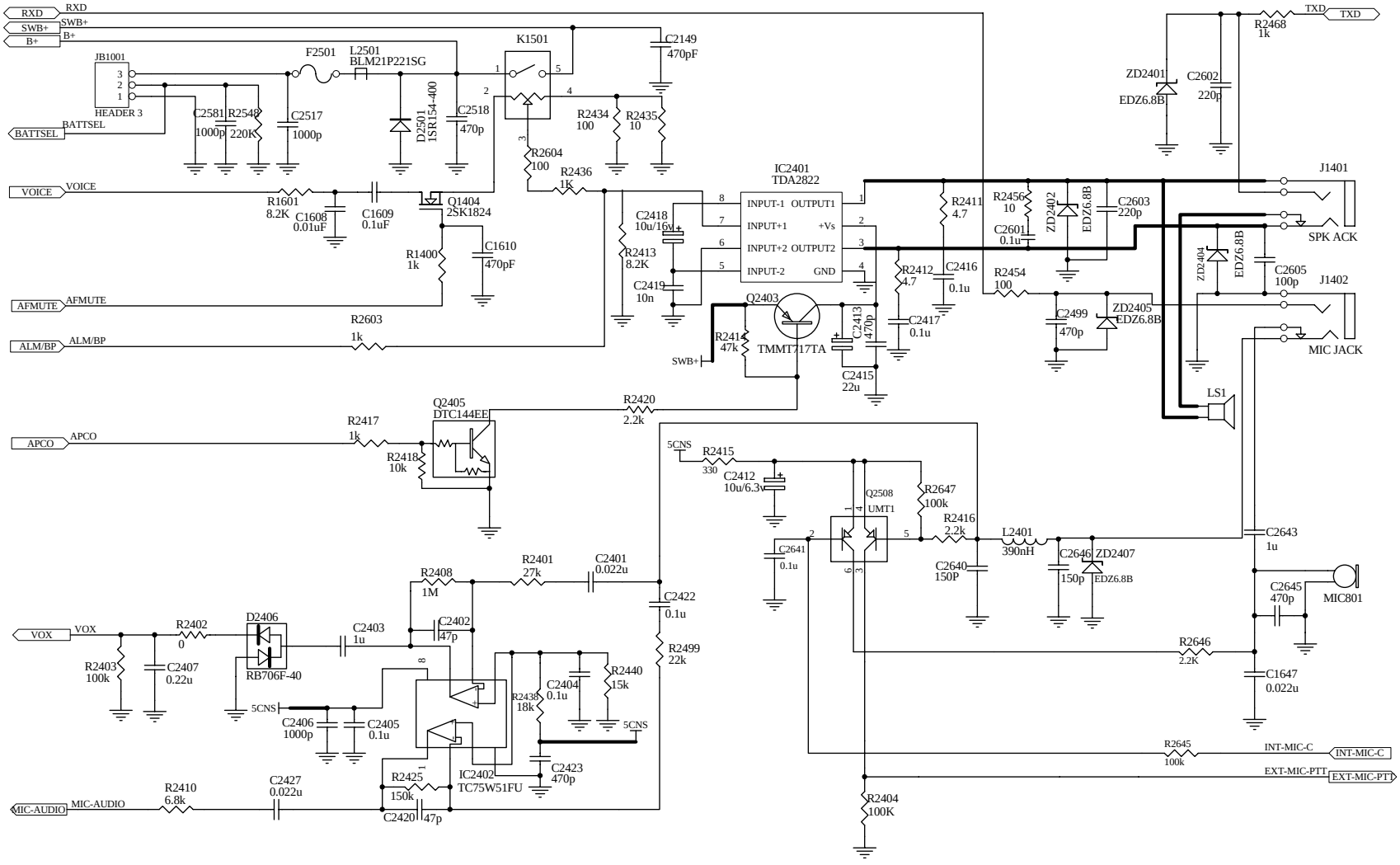

Title	Surwave
Size	Number QP750_AF
A3	
Date: 21-Jul-20	Sheet of
File: C:\Documents and Settings\Administrator\Desktop\QP750_AF.DDB	Drawn by:

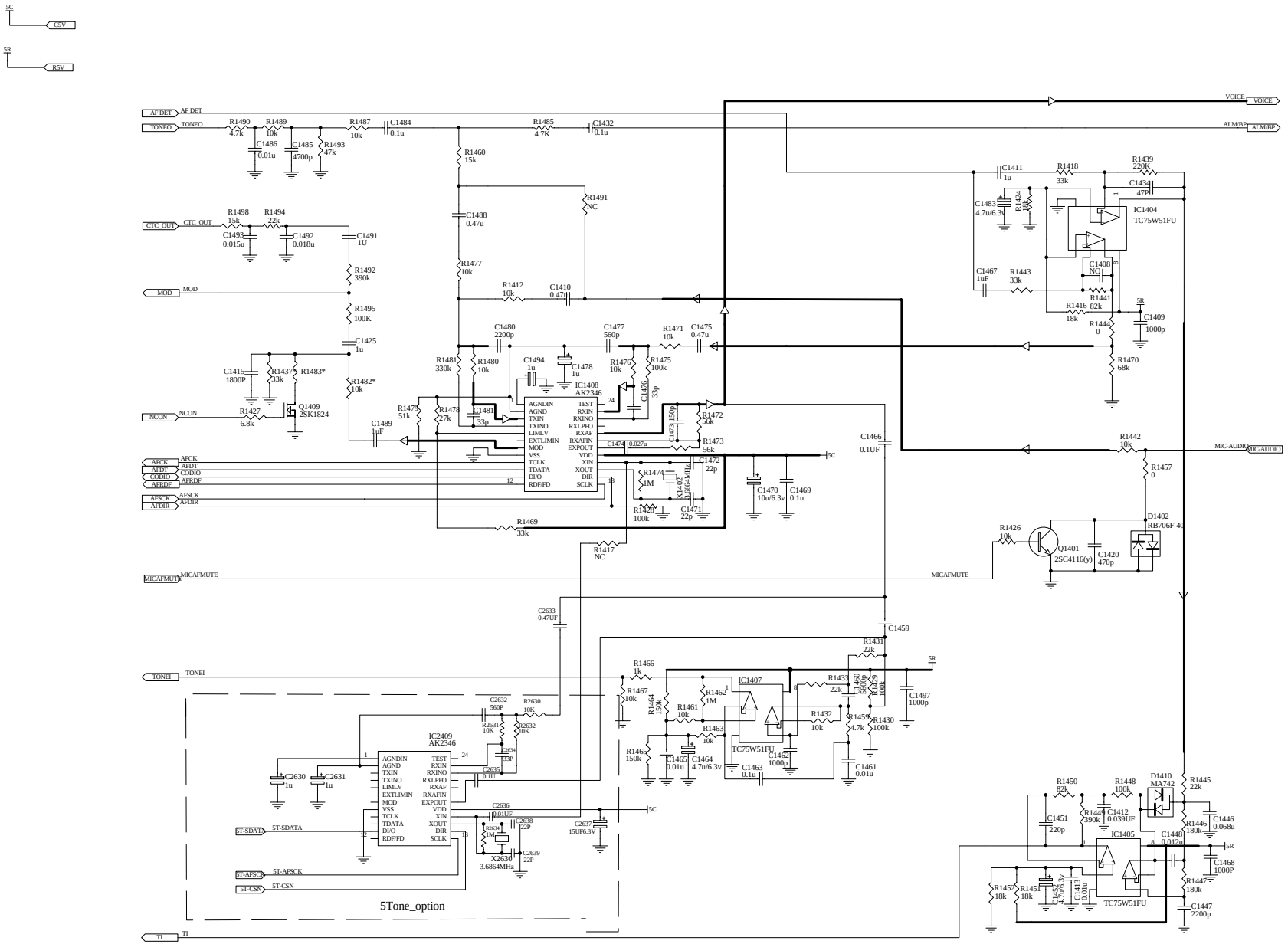

Title	**Surwave**		
Size A2	Number **QP750_BB**		Revision V00
Date: 21-Jul-2009		Sheet 5 of 6	
File: D:\111\QP750SCH.DDB		Drawn By:	